Class 150 Flanges

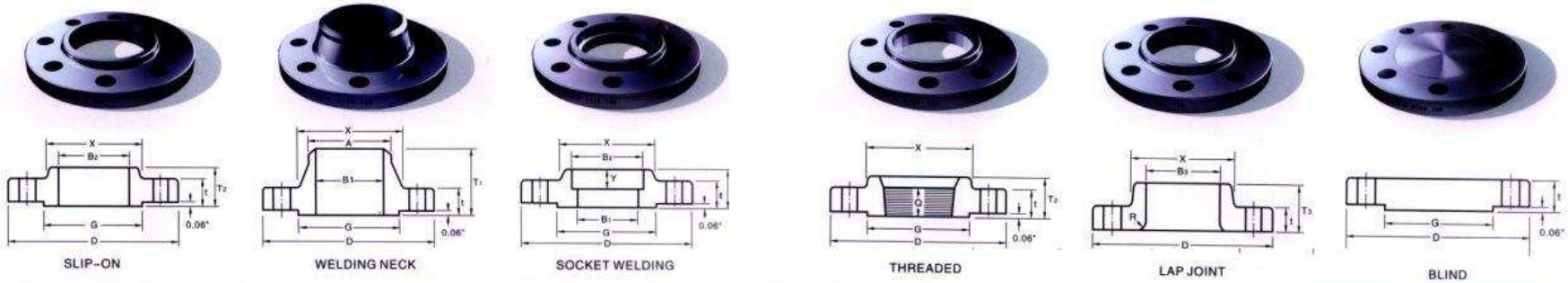

ANSI B16.5 FORGED FLANGES

NPS	DIN	FLANGE OUTSIDE DIAMETER D	FLANGE2 THICKNESS MIN t	RAISED FACE DIA G	Diam. At base of Hub X	BORE: WELDING NECK & SOCKET WELDING B1	BORE: SLIP-ONR SOCKET WELD SOCKET MIN B2	BORE: LAP JOINT MIN B3	LENGTH THRU HUB: WELDING NECK T1	LENGTH THRU HUB: SLIP-ON, THREADED & SOCK WELD T2	LENGTH THRU HUB: LAP JOINT T3	Diam. of Hub at Bevel A	LAP JOINT FILLET RADIUS R	Thread Lengh Q
1/2"	15	3.50 88.90	0.44 11.20	1.38 35.10	1.19 30.20	0.62 15.70	0.88 22.40	0.90 22.90	1.88 47.80	0.62 15.70	0.62 15.70	0.84 21.30	0.12 3.00	0.62 15.70
3/4"	20	3.88 98.60	0.50 12.70	1.69 42.90	1.50 38.10	0.82 20.80	1.09 27.70	1.11 28.20	2.06 52.30	0.62 15.70	0.62 15.70	1.05 26.70	0.12 3.00	0.62 15.70
1"	25	4.25 108.00	0.56 14.20	2.00 50.80	1.94 49.30	1.05 26.70	1.36 34.50	1.38 35.10	2.19 55.60	0.69 17.50	0.69 17.50	1.32 33.50	0.12 3.00	0.69 17.50
1-1/4"	32	4.62 117.30	0.62 15.70	2.50 63.50	2.31 58.70	1.38 35.10	1.70 43.20	1.73 43.70	2.25 57.20	0.81 20.60	0.81 20.60	1.66 42.20	0.19 4.80	0.81 20.60
1-1/2"	40	5.00 127.00	0.69 17.50	2.88 73.20	2.56 65.00	1.61 40.90	1.95 49.50	1.97 50.00	2.44 62.00	0.88 22.40	0.88 22.40	1.90 48.30	0.25 6.40	0.88 22.40
2"	50	6.00 152.40	0.75 19.10	3.62 91.90	3.06 77.70	2.07 52.60	2.44 62.00	2.46 62.50	2.50 63.50	1.00 25.40	1.00 25.40	2.38 60.50	0.31 7.90	1.00 25.40
2-1/2"	65	7.00 177.80	0.88 22.40	4.12 104.60	3.56 90.40	2.47 62.70	2.94 74.70	2.97 75.40	2.75 69.90	1.12 28.40	1.12 28.40	2.88 73.20	0.31 7.90	1.12 28.40
3"	80	7.50 190.50	0.94 23.90	5.00 127.00	4.25 108.00	3.07 78.00	3.57 90.70	3.60 91.40	2.75 69.90	1.19 30.20	1.19 30.20	3.50 88.90	0.38 9.70	1.19 30.20
3-1/2"	90	8.50 215.90	0.94 23.90	5.50 139.70	4.81 122.20	3.55 90.20	4.07 103.40	4.10 104.10	2.81 71.40	1.25 31.80	1.25 31.80	4.00 101.60	0.38 9.70	1.25 31.80
4"	100	9.00 228.60	0.94 23.90	6.19 157.20	5.31 134.90	4.03 102.40	4.57 116.10	4.60 116.80	3.00 76.20	1.31 33.30	1.31 33.30	4.50 114.30	0.44 11.20	1.31 33.30
5"	125	10.00 254.00	0.94 23.90	7.31 185.70	6.44 163.60	5.05 128.30	5.66 143.80	5.69 144.50	3.50 88.90	1.44 36.60	1.44 36.60	5.56 141.20	0.44 11.20	1.44 36.60
6"	150	11.00 279.40	1.00 25.40	8.50 215.90	7.56 192.00	6.07 154.20	6.72 170.70	6.75 171.50	3.50 88.90	1.56 39.60	1.56 39.60	6.63 168.40	0.50 12.70	1.56 39.60
8"	200	13.50 342.90	1.12 28.40	10.62 269.70	9.69 246.10	7.98 202.70	8.72 221.50	8.75 222.30	4.00 101.60	1.75 44.50	1.75 44.50	8.63 219.20	0.50 12.70	1.75 44.50
10"	250	16.00 406.40	1.19 30.20	12.75 323.90	12.00 304.80	10.02 254.50	10.88 276.40	10.92 277.40	4.00 101.60	1.94 49.30	1.94 49.30	10.75 273.10	0.50 12.70	1.94 49.30
12"	300	19.00 482.60	1.25 31.80	15.00 381.00	14.38 365.30	11.94 303.20	12.88 327.20	12.92 328.20	4.50 114.30	2.19 55.60	2.19 55.60	12.75 323.90	0.50 12.70	2.19 55.60
14"	350	21.00 533.40	1.38 35.10	16.25 412.80	15.75 400.10	13.25 336.60	14.14 359.20	14.18 360.20	5.00 127.00	2.25 57.20	3.12 79.20	14.00 355.60	0.50 12.70	2.25 57.20
16"	400	23.50 596.90	1.44 36.60	18.50 469.90	18.00 457.20	15.25 387.40	16.16 410.50	16.19 411.20	5.00 127.00	2.50 63.50	3.44 87.40	16.00 406.40	0.50 12.70	2.50 63.50
18"	450	25.00 635.00	1.56 39.60	21.00 533.40	19.88 505.00	17.25 438.20	18.18 461.80	18.20 462.30	5.50 139.70	2.69 68.30	3.81 96.80	18.00 457.20	0.50 12.70	2.69 68.30
20"	500	27.50 698.50	1.69 42.90	23.00 584.20	22.00 558.80	19.25 489.00	20.20 513.10	20.25 514.40	5.69 144.50	2.88 73.20	4.06 103.10	20.00 508.00	0.50 12.70	2.88 73.20
24"	600	32.00 812.80	1.88 47.80	27.25 692.20	26.12 663.40	23.25 590.60	24.25 616.00	24.25 616.00	6.00 152.40	3.25 82.60	3.25 82.60	4.38 111.30	24.00 609.60	0.50 12.70	3.25 82.60

> 1.Socket Welding Flanges,sizes NPS 3-1/2（DN 90）and larger are not covered by ANSI B16.5.
> 2.Includes.06"（1.6mm）raised face.
> 3.These dimensions correspond to inside diameters of pipe as given in ANSI B 16.10 for Standard Wall Pipe. Thickness of Standard Wall is the same as Schedule.40 in size NPS 10（ND250）and smaller.

Dimensions in inches

DEPTH OF SOCKET Y	DRILLING: DIA.OF BOLT CIRCLE	DRILLING: NO.OF HOLES	DRILLING: DIA.OF HOLES	DIAM OF BOLTS	MACHINE BOLT LENGTH RF	STUD BLIT LENGTH RF	STUD BLIT LENGTH RING JOINT	APPROXIMATE WEIGHT: WELDING NECK	APPROXIMATE WEIGHT: SLIP-ON, THREADED & SOCK WELD	APPROXIMATE WEIGHT: BLIND	APPROXIMATE WEIGHT: LAP JOINT	DIN	NPS
0.38 9.70	2.38 60.50	4	0.62 15.70	1/2	2.00	2.25		2.00 0.90	1.00 0.50	1.00 0.50	1.00 0.50	15	1/2"
0.44 11.20	2.75 69.90	4	0.62 15.70	1/2	2.00 50.80	2.50 63.50		2.00 0.90	2.00 0.90	2.00 0.90	2.00 0.90	20	3/4"
0.50 12.70	3.12 79.20	4	0.62 15.70	1/2	2.25 57.20	2.50 63.50	3.00 76.20	3.00 1.40	2.00 0.90	2.00 0.90	2.00 0.90	25	1"
0.56 14.20	3.50 88.90	4	0.62 15.70	1/2	2.25 57.20	2.75 69.90	3.25 82.60	3.00 1.40	3.00 1.40	3.00 1.40	3.00 1.40	32	1-1/4"
0.62 15.70	3.88 98.60	4	0.62 15.70	1/2	2.50 63.50	2.75 69.90	3.25 82.60	4.00 1.80	3.00 1.40	4.00 1.80	3.00 1.40	40	1-1/2"
0.69 17.50	4.75 120.70	4	0.75 19.10	5/8	2.75 69.90	3.25 82.60	3.75 95.30	6.00 2.70	5.00 2.30	5.00 2.30	5.00 2.30	50	2"
0.75 19.10	5.50 139.70	4	0.75 19.10	5/8	3.00 76.20	3.50 88.90	4.00 101.60	8.00 3.60	7.00 3.20	7.00 3.20	7.00 3.20	65	2-1/2"
0.81 20.60	6.00 152.40	4	0.75 19.10	5/8	3.00 76.20	3.50 88.90	4.00 101.60	11.00 4.90	8.00 3.60	11.00 5.10	8.00 3.60	80	3"
0.88 22.40	7.00 177.80	8	0.75 19.10	5/8	3.00 76.20	3.50 88.90	4.00 101.60	12.00 5.40	11.00 5.00	13.00 5.90	11.00 5.00	90	3-1/2"
0.94 23.90	7.50 190.50	8	0.75 19.10	5/8	3.00 76.20	3.50 88.90	4.00 101.60	15.00 6.80	13.00 5.90	17.00 7.70	13.00 5.90	100	4"
0.94 23.90	8.50 215.90	8	0.88 22.40	3/4	3.25 82.60	3.75 95.30	4.25 108.00	19.00 8.60	15.00 6.80	20.00 9.10	15.00 6.80	125	5"
1.06 26.90	9.50 241.30	8	0.88 22.40	3/4	3.25 82.60	4.00 101.60	4.50 114.30	24.00 10.90	19.00 8.60	26.00 11.80	19.00 8.60	150	6"
1.25 31.80	11.75 298.50	8	0.88 22.40	3/4	3.50 88.90	4.25 108.00	4.75 120.70	39.00 17.70	30.00 13.60	45.00 20.40	30.00 13.60	200	8"
1.31 33.30	14.25 362.00	12	1.00 25.40	7/8	4.00 101.60	4.50 114.30	5.00 127.00	52.00 23.60	43.00 19.50	70.00 31.80	43.00 19.50	250	10"
1.56 39.60	17.00 431.80	12	1.00 25.40	7/8	4.00 101.60	4.75 120.70	5.25 133.40	80.00 36.30	64.00 29.00	110.00 49.90	64.00 29.00	300	12"
1.63 41.40	18.75 476.30	12	1.12 28.40	1	4.50 114.30	5.25 133.40	5.75 146.10	110.00 50.00	90.00 41.00	140.00 63.50	105.00 47.60	350	14"
1.75 44.50	21.25 539.80	16	1.12 28.40	1	4.50 114.30	5.25 133.40	5.75 146.10	141.00 64.00	98.00 44.50	180.00 81.60	140.00 63.50	400	16"
1.94 49.30	22.75 577.90	16	1.25 31.80	1-1/8	5.00 127.00	5.75 146.10	6.25 158.80	150.00 68.00	130.00 59.00	220.00 99.80	160.00 72.60	450	18"
2.13 54.10	25.00 635.00	20	1.25 31.80	1-1/8	5.50 139.70	6.25 158.80	6.75 171.50	180.00 81.60	165.00 75.00	284.00 129.00	195.00 88.50	500	20"
2.50 63.50	29.50 749.30	20	1.38 35.10	1-1/4	6.00 152.40	6.75 171.50	7.25 184.20	260.00 118.00	220.00 99.80	429.00 195.00	275.00 125.00	600	24"

Class 300 Flanges

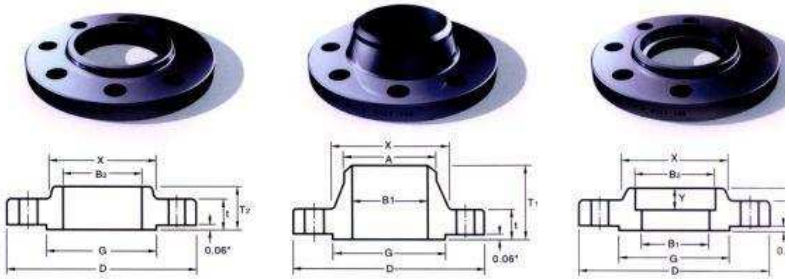

SLIP-ON WELDING NECK SOCKET WELDING

THREADED LAP JOINT BLIND

ANSI B16.5 FORGED FLANGES

Dimensions in inches

NPS	DIN	FLANGE OUTSIDE DIAMETER	FLANGE2 THICKNESS MIN	RAISED FACE DIA	Diam. At base of Hub	BORE: WELDING NECK & SOCKET WELDING	BORE: SLIP-ON& SOCKET WELD SOCKET MIN	BORE: LAP JOINT MIN	BORE: Counter Bore Min. Threaded Min	LENGTH THRU HUB: WELDING NECK	LENGTH THRU HUB: SLIP-ON, THREADED & SOCK WELD	LENGTH THRU HUB: LAP JOINT	Diam. of Hub at Bevel	LAP JOINT FILLET RADIUS	Thr Len
		D	t	G	X	B1	B2	B3	B	T1	T2	T3	A	R	Y
1/2"	15	3.75 95.30	0.56 14.20	1.38 35.10	1.50 38.10	0.62 15.70	0.88 22.40	0.90 22.90	0.93 23.60	2.06 52.30	0.88 22.40	0.88 22.40	0.84 21.30	0.12 3.00	0 15
3/4"	20	4.62 117.30	0.62 15.70	1.69 42.90	1.88 47.80	0.82 20.80	1.09 27.70	1.11 28.20	1.14 29.00	2.25 57.20	1.00 25.40	1.00 25.40	1.05 26.70	0.12 3.00	0 15
1"	25	4.88 124.00	0.69 17.50	2.00 50.80	2.12 53.80	1.05 26.70	1.36 34.50	1.38 35.10	1.41 35.80	2.44 62.00	1.06 26.90	1.06 26.90	1.32 33.50	0.12 3.00	0 17
1-1/4"	32	5.25 133.40	0.75 19.10	2.50 63.50	2.50 63.50	1.38 35.10	1.70 43.20	1.72 43.70	1.75 44.50	2.56 65.00	1.06 26.90	1.06 26.90	1.66 42.20	0.19 4.80	0 20
1-1/2"	40	6.12 155.40	0.81 20.60	2.88 73.20	2.75 69.90	1.61 40.90	1.95 49.50	1.97 50.00	1.99 50.50	2.69 68.30	1.19 30.20	1.19 30.20	1.90 48.30	0.25 6.40	0 22
2"	50	6.50 165.10	0.88 22.40	3.62 91.90	3.31 84.10	2.07 52.60	2.44 62.00	2.46 62.50	2.50 63.50	2.75 69.90	1.31 33.30	1.31 33.30	2.38 60.50	0.31 7.90	1 28
2-1/2"	65	7.50 190.50	1.00 25.40	4.12 104.60	3.94 100.10	2.47 62.70	2.94 74.70	2.97 75.40	3.00 76.20	3.00 76.20	1.50 38.10	1.50 38.10	2.88 73.20	0.31 7.90	1 31
3"	80	8.25 209.60	1.12 28.40	5.00 127.00	4.62 117.30	3.07 78.00	3.57 90.70	3.60 91.40	3.63 92.20	3.12 79.20	1.69 42.90	1.69 42.90	3.50 88.90	0.38 9.70	1 31
3-1/2"	90	9.00 228.60	1.19 30.20	5.50 139.70	5.25 133.40	3.55 90.20	4.07 103.40	4.10 104.10	4.13 104.90	3.19 81.00	1.75 44.50	1.75 44.50	4.00 101.60	0.38 9.70	1 36
4"	100	10.00 254.00	1.25 31.80	6.19 157.20	5.75 146.10	4.03 102.40	4.57 116.10	4.60 116.80	4.63 117.60	3.38 85.90	1.88 47.80	1.88 47.80	4.50 114.30	0.44 11.20	1 36
5"	125	11.00 279.40	1.38 35.10	7.31 185.70	7.00 177.80	5.05 128.30	5.66 143.80	5.69 144.50	5.69 144.50	3.88 98.60	2.00 50.80	2.00 50.80	5.56 141.20	0.44 11.20	1 42
6"	150	12.50 317.50	1.44 36.60	8.50 215.90	8.12 206.20	6.07 154.20	6.72 170.70	6.75 171.50	6.75 171.50	3.88 98.60	2.06 52.30	2.06 52.30	6.63 168.40	0.50 12.70	1 46
8"	200	15.00 381.00	1.62 41.10	10.62 269.70	10.25 260.40	7.98 202.70	8.72 221.50	8.75 222.30	8.75 222.30	4.38 111.30	2.44 62.00	2.44 62.00	8.63 219.20	0.50 12.70	2 50
10"	250	17.50 444.50	1.88 47.80	12.75 323.90	12.62 320.50	10.02 254.50	10.88 276.40	10.92 277.40	10.88 276.40	4.62 117.30	2.62 66.50	3.75 95.30	10.75 273.10	0.50 12.70	2 55
12"	300	20.50 520.70	2.00 50.80	15.00 381.00	14.75 374.70	12.00 304.80	12.88 327.20	12.92 328.20	12.94 328.70	5.12 130.00	2.88 73.20	4.00 101.60	12.75 323.90	0.50 12.70	2 60
14"	350	23.00 584.20	2.12 53.80	16.25 412.80	16.75 425.50	13.25 336.60	14.14 359.20	14.18 360.20	14.19 360.40	5.62 142.70	3.00 76.20	4.38 111.30	14.00 355.60	0.50 12.70	2 63
16"	400	25.50 647.70	2.25 57.20	18.50 469.90	19.00 482.60	15.25 378.40	16.16 410.50	16.19 411.20	16.19 411.20	5.75 146.10	3.25 82.60	4.75 120.70	16.00 406.40	0.50 12.70	2 68
18"	450	28.00 711.20	2.38 60.50	21.00 533.40	21.00 533.40	17.25 438.20	18.18 461.80	18.20 462.30	18.19 462.00	6.25 158.80	3.50 88.90	5.12 130.00	18.00 457.20	0.50 12.70	2 68
20"	500	30.50 774.70	2.50 63.50	23.00 584.20	23.12 587.20	19.25 489.00	20.20 513.10	20.25 514.40	20.19 512.80	6.38 162.10	3.75 95.30	5.50 139.70	20.00 508.00	0.50 12.70	2 73
24"	600	36.00 914.40	2.75 69.90	27.25 692.20	27.62 701.50	23.25 590.60	24.25 616.00	24.25 616.00	24.19 614.40	6.62 168.10	4.19 106.40	6.00 152.40	24.00 609.60	0.50 12.70	3 82

DEPTH OF SOCKET	DRILLING: DIA.OF BOLT CIRCLE	DRILLING: NO.OF HOLES	DRILLING: DIA.OF HOLES	BOLTING: DIAM OF BOLTS	BOLTING: MACHINE BOLT LENGTH	BOLTING: STUD BLT LENGTH	BOLTING: STUD BLT LENGTH	BOLTING: STUD BLT LENGTH	APPROXIMATE WEIGHT: WELDING NECK	APPROXIMATE WEIGHT: SLIP-ON, THREADED & SOCK WELD	APPROXIMATE WEIGHT: BLIND	APPROXIMATE WEIGHT: LAP JOINT	DIN	NPS
Y					RF	RF	RING JOINT							
0.38 9.70	2.62 66.50	4	0.62 15.70	1/2	2.25 57.20	2.50 63.50	3.00 76.20	2.00 0.90	2.00 0.90	2.00 0.90	2.00 0.90	15	1/2"
0.44 11.20	3.25 82.60	4	0.75 19.10	5/8	2.50 63.50	3.00 76.20	3.50 88.90	3.00 1.40	3.00 1.40	3.00 1.40	3.00 1.40	20	3/4"
0.50 112.70	3.50 88.90	4	0.75 19.10	5/8	2.50 63.50	3.00 76.20	3.50 88.90	4.00 1.80	3.00 1.40	3.00 1.40	3.00 1.40	25	1"
0.56 14.20	3.88 98.60	4	0.75 19.10	5/8	2.75 69.90	3.25 82.60	3.75 95.30	5.00 2.30	4.00 1.80	4.00 1.80	4.00 1.80	32	1-1/4"
0.62 15.70	4.50 114.30	4	0.88 22.40	3/4	3.00 76.20	3.50 88.90	4.00 101.60	7.00 3.20	6.00 2.70	6.00 2.70	6.00 2.70	40	1-1/2"
0.69 17.50	5.00 127.00	8	0.75 19.10	5/8	3.00 76.20	3.50 88.90	4.00 101.60	9.00 4.10	7.00 3.20	8.00 3.60	7.00 3.20	50	2"
0.75 19.10	5.88 149.40	8	0.88 22.40	3/4	3.25 82.60	4.00 101.60	4.50 114.30	12.00 5.40	10.00 4.50	12.00 5.40	10.00 4.50	65	2-1/2"
0.81 20.60	6.62 168.10	8	0.88 22.40	3/4	3.50 88.90	4.25 108.00	4.75 120.70	15.00 6.80	13.00 5.90	16.00 7.30	13.00 5.90	80	3"
0.88 22.40	7.25 184.20	8	0.88 22.40	3/4	3.75 95.30	4.25 108.00	5.00 127.00	18.00 8.20	17.00 7.70	21.00 9.50	17.00 7.70	90	3-1/2"
0.94 23.90	7.88 200.20	8	0.88 22.40	3/4	3.75 95.30	4.50 114.30	5.00 127.00	25.00 11.30	22.00 10.00	27.00 12.20	22.00 10.00	100	4"
0.94 23.90	9.25 235.00	8	0.88 22.40	3/4	4.25 108.00	4.75 120.70	5.25 133.40	32.00 14.50	28.00 12.70	35.00 15.90	28.00 12.70	125	5"
1.06 26.90	10.62 269.70	12	0.88 22.40	3/4	4.25 108.00	4.75 120.70	5.50 139.70	42.00 19.00	39.00 17.70	50.00 22.70	39.00 17.70	150	6"
1.25 31.80	13.00 330.20	12	1.00 25.40	7/8	4.75 120.70	5.50 139.70	6.00 152.40	67.00 30.40	58.00 26.30	81.00 36.70	58.00 26.30	200	8"
1.31 33.30	15.25 387.40	16	1.12 28.40	1	5.50 139.70	6.25 158.80	6.75 171.50	91.00 41.30	81.00 36.70	125.00 56.70	91.00 41.30	250	10"
1.56 39.60	17.75 450.90	16	1.25 31.80	1-1/8	5.75 146.10	6.75 171.50	7.25 184.20	140.00 63.50	115.00 52.20	185.00 83.90	140.00 63.50	300	12"
1.63 41.40	20.25 514.40	20	1.25 31.80	1-1/8	6.25 158.80	7.00 177.80	7.50 190.50	180.00 81.60	165.00 74.80	249.00 113.00	190.00 86.20	350	14"
1.75 44.50	22.50 571.50	20	1.38 35.10	1-1/4	6.50 165.10	7.50 190.50	8.00	249.00 113.00	190.00 86.20	295.00 134.00	249.00 113.00	400	16"
1.94 49.30	24.75 628.70	24	1.38 35.10	1-1/4	6.75 171.50	7.75 196.90	8.25 209.60	319.00 145.00	249.00 113.00	394.00 179.00	295.00 134.00	450	18"
2.13 54.10	27.00 685.80	24	1.38 35.10	1-1/4	7.25 184.20	8.00 230.20	8.75 222.30	398.00 181.00	315.00 143.00	504.00 229.00	370.00 168.00	500	20"
2.50 63.50	32.00 812.80	24	1.62 41.10	1-1/2	8.00 203.20	9.00 228.60	10.00 254.00	579.00 263.00	473.00 215.00	788.00 358.00	548.00 249.00	600	24"

> 1.Socket Welding Flanges,sizes NPS 3-1/2（DN 90）and larger are not covered by ANSI B16.5
> 2.Includes.06"（1.6mm）raised face.
> 3.These dimensions correspond to inside diameters of pipe as given in ANSI B 16.10 for Standard Wall Pipe. Thickness of Standard Wall is the same as Schedule.40 in size NPS 10（ND250）and smaller.

Class 600 Flanges

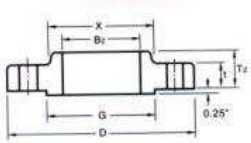

SLIP-ON

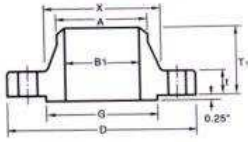

WELDING NECK

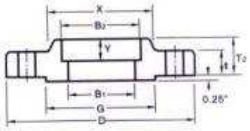

SOCKET WELDING

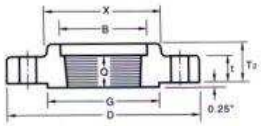

THREADED

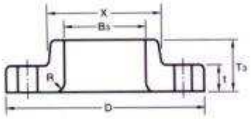

LAP JOINT

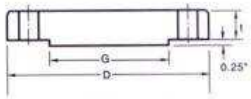

BLIND

ANSI B16.5 FORGED FLANGES

Dimensions in inches

NPS		FLANGE OUTSIDE DIAMETER	FLANGE2 THICKNESS MIN	RAISED FACE DIA	Diam. At base of Hub	BORE: WELDING NECK & SOCKET WELDING	BORE: SLIP-ONA SOCKET WELD SOCKET MIN	BORE: LAP JOINT MIN	BORE: Counter Bore Min Threaded Min	LENGTH THRU HUB: WELDING NECK	LENGTH THRU HUB: SLIP-ON, THREADED & SOCK WELD	LENGTH THRU HUB: LAP-JOINT	Diam. of Hub at Bevel	LAP JOINT FILLET RADIUS	Thread Langh
	DIN	D	t	G	X	B1	B2	B3	B	T1	T2	T3	A	R	Q
1/2"	15	3.75 95.30	0.56 14.20	1.38 35.10	1.50 38.10	0.62 15.70	0.86 22.4	0.90 22.90	0.93 23.60	2.06 52.30	0.88 22.40	0.88 22.40	0.84 21.30	0.12 3.00	0.62
3/4"	20	4.62 117.30	0.62 15.70	1.69 42.90	1.88 47.80	0.82 20.80	1.09 27.70	1.11 28.20	1.14 29.00	2.25 57.20	1.00 25.40	1.00 25.40	1.05 26.70	0.12 3.00	0.62 15.70
1"	25	4.88 124.00	0.69 17.50	2.00 50.80	2.12 53.80	1.05 26.70	1.36 34.50	1.38 35.10	1.41 35.80	2.44 62.00	1.06 26.90	1.06 26.90	1.32 33.50	0.12 3.00	0.69 17.50
1-1/4"	32	5.25 133.40	0.81 20.60	2.50 63.50	2.50 63.50	1.38 35.10	1.70 43.20	1.72 43.70	1.75 44.50	2.62 66.50	1.12 28.40	1.12 28.40	1.66 42.20	0.19 4.80	0.81 20.60
1-1/2"	40	6.12 155.40	0.88 22.40	2.88 73.20	2.75 69.90	1.61 40.90	1.95 49.50	1.97 50.00	1.99 50.50	2.75 69.90	1.25 31.80	1.25 31.80	1.90 48.30	0.25 6.40	0.88 22.40
2"	50	6.50 165.10	1.00 25.40	3.62 91.90	3.31 84.10	2.07 52.60	2.44 62.00	2.46 62.50	2.50 63.50	2.88 73.2	1.44 36.60	1.44 36.60	2.38 60.50	0.31 7.90	1.12 28.40
2-1/2"	65	7.50 190.50	1.12 28.40	4.12 104.60	3.94 100.10	2.47 62.70	2.94 74.70	2.97 75.40	3.00 76.20	3.12 79.20	1.62 41.10	1.62 41.10	2.88 73.20	0.31 7.90	1.25 31.80
3"	80	8.25 209.60	1.25 31.80	5.00 127.00	4.62 117.30	3.07 78.00	3.57 90.70	3.60 91.40	3.63 92.20	3.25 82.60	1.81 46.00	1.81 46.00	3.50 88.90	0.38 9.70	1.38 35.10
3-1/2"	90	9.00 228.60	1.38 35.10	5.50 139.70	5.25 133.40	3.55 90.20	4.07 103.40	4.10 104.10	4.13 104.90	3.38 85.90	1.94 49.30	1.94 49.30	4.00 101.60	0.38 9.70	1.56 39.60
4"	100	10.75 273.10	1.50 38.10	6.19 157.20	6.00 152.40	4.03 102.40	4.57 116.10	4.60 116.80	4.63 117.60	4.00 101.60	2.12 53.80	2.12 53.80	4.50 114.30	0.44 11.20	1.62 41.10
5"	125	13.00 330.20	1.75 44.50	7.31 185.70	7.44 189.00	5.05 128.30	5.66 143.80	5.69 144.50	5.69 144.50	4.50 114.30	2.38 60.50	2.38 60.50	5.56 141.20	0.44 11.20	1.88 47.80
6"	150	14.00 355.60	1.88 47.80	8.50 215.90	8.75 222.30	6.07 154.20	6.72 170.70	6.75 171.50	6.75 171.50	4.62 117.30	2.62 66.50	2.62 66.50	6.63 168.40	0.50 12.70	2.00 50.80
8"	200	16.50 419.10	2.19 55.60	10.62 269.70	10.75 273.10	7.98 202.70	8.72 221.50	8.75 222.30	8.75 222.30	5.25 133.40	3.00 76.20	3.00 76.20	8.63 219.20	0.50 12.70	2.25 57.20
10"	250	20.00 508.00	2.50 63.50	12.75 323.90	13.50 342.90	10.02 254.50	10.88 276.40	10.92 277.40	10.88 276.40	6.00 152.40	3.38 85.90	4.38 111.30	10.75 273.10	0.50 12.70	2.56 65.00
12"	300	22.00 558.80	2.62 66.50	15.00 381.00	15.75 400.10	11.94 303.30	12.88 327.20	12.92 328.20	12.94 328.70	6.12 155.40	3.62 91.90	4.62 117.30	12.75 323.90	0.50 12.70	2.75 69.90
14"	350	23.75 603.30	2.75 69.90	16.25 412.80	17.00 431.80	13.25 336.60	14.14 359.20	14.18 360.20	14.19 360.40	6.50 165.10	3.69 93.70	5.00 127.00	14.00 355.60	0.50 12.70	2.88 73.20
16"	400	27.00 685.80	3.00 76.20	18.50 469.90	19.50 495.30	15.25 387.40	16.16 410.50	16.19 411.20	16.19 411.20	7.00 177.80	4.19 106.40	5.50 139.70	16.00 406.40	0.50 12.70	3.06 77.70
18"	450	29.25 743.00	3.25 82.60	21.00 533.40	21.50 546.10	17.25 438.20	18.18 461.80	18.20 462.30	18.19 462.00	7.25 184.20	4.62 117.30	6.00 152.40	18.00 457.20	0.50 12.70	3.12 79.20
20"	500	32.00 812.80	3.50 88.90	23.00 584.20	24.00 609.60	19.25 489.00	20.20 513.10	20.25 514.40	20.19 512.80	7.50 190.50	5.00 127.00	6.50 165.10	20.00 508.00	0.50 12.70	3.25 82.60
24"	600	37.00 939.80	4.00 101.60	27.25 692.20	28.25 717.60	23.25 590.60	24.25 616.00	24.25 616.00	24.19 614.40	8.00 203.20	5.50 139.70	7.25 184.20	24.00 609.60	0.50 12.70	3.62 91.90

> 1.Socket Welding Flanges,sizes NPS 3-1/2 (DN 90) and larger are not covered by ANSI B16.5

> 2.Does not include,25" (6.4mm) raised face

DEPTH OF SOCKET	DRILLING: DIA.OF BOLT CIRCLE	DRILLING: NO.OF HOLES	DRILLING: DIA.OF HOLES	DIAM OF BOLTS	MACHINE BOLT LENGTH	STUD BLIT LENGTH		APPROXIMATE WEIGHT: WELDING NECK	APPROXIMATE WEIGHT: SLIP-ON, THREADED & SOCK WELD	APPROXIMATE WEIGHT: BLIND	APPROXIMATE WEIGHT: LAP JIONT	DIN	NPS
Y					R F	R F	RING JOINT						
0.38 9.70	2.62 66.50	4	0.62 15.70	1/2	3.00 76.20	2.75 69.90	3.00 76.20	2.0 0.9	2.0 0.9	2.0 0.9	2.0 0.9	15	1/2"
0.44 11.20	3.25 82.60	4	0.75 19.10	5/8	3.50 88.90	3.25 82.60	3.50 88.90	4.0 1.8	3.0 1.4	3.0 1.4	3.0 1.4	20	3/4"
0.50 12.70	3.50 88.90	4	0.75 19.10	5/8	3.50 88.90	3.25 82.60	3.50 88.90	4.0 1.8	4.0 1.8	4.0 1.8	4.0 1.8	25	1"
0.56 14.20	3.88 98.60	4	0.75 19.10	5/8	3.75 95.30	3.50 88.90	3.75 95.30	6.0 2.7	5.0 2.3	5.0 2.3	5.0 2.3	32	1-1/4"
0.62 15.70	4.50 114.30	4	0.88 22.40	3/4	4.25 108.00	4.00 101.60	4.25 108.00	8.0 3.6	7.0 3.2	8.0 3.6	7.0 3.2	40	1-1/2"
0.69 17.50	5.00 127.00	8	0.75 19.10	5/8	4.25 108.00	4.00 101.60	4.25 108.00	12.0 5.4	9.0 4.1	10.0 4.5	9.0 4.1	50	2"
0.75 19.10	5.88 149.40	8	0.88 22.40	3/4	4.75 120.70	4.50 114.30	4.75 120.70	18.0 8.2	13.0 5.9	15.0 6.8	12.0 5.4	65	2-1/2"
0.81 20.60	6.62 168.10	8	0.88 22.40	3/4	5.00 127.00	4.75 120.70	5.00 127.00	23.0 10.40	16.0 7.3	20.0 9.1	15.0 6.8	80	3"
0.88 22.40	7.25 184.20	8	1.00 25.40	7/8	5.50 139.70	5.25 133.40	5.50 139.70	26.0 11.8	21.0 9.5	29.0 13.2	20.0 9.1	90	3-1/2"
0.94 23.90	8.50 215.90	8	1.00 25.40	7/8	5.75 146.10	5.50 139.70	5.75 146.10	42.0 19.0	37.0 16.8	41.0 18.6	36.0 16.3	100	4"
0.94 23.90	10.50 266.70	8	1.12 28.40	1	6.50 165.10	6.25 158.80	6.50 165.10	68.0 31.0	63.0 28.6	68.0 30.8	61.0 27.7	125	5"
1.06 26.90	11.50 292.10	12	1.12 28.40	1	6.75 171.50	6.50 165.10	6.75 171.50	81.0 36.7	80.0 36.3	86.0 39.0	78.0 35.4	150	6"
1.25 31.80	13.75 349.30	12	1.25 31.80	1-1/8	7.50 190.50	7.25 184.20	7.75 196.90	120.0 54.4	115.0 52.2	140.0 63.5	110.0 49.9	200	8"
1.31 33.30	17.00 431.80	16	1.38 35.10	1-1/4	8.50 215.90	8.25 209.60	8.50 215.90	180.0 86.2	170.0 77.1	229.0 104.0	171.0 77.7	250	10"
1.56 39.60	19.25 489.00	20	1.38 35.10	1-1/4	8.75 222.30	8.50 215.90	8.75 222.30	224.0 102.0	200.0 90.7	295.0 134.0	200.0 90.7	300	12"
1.63 41.40	20.75 527.10	20	1.50 38.10	1-3/8	9.25 235.00	9.00 228.60	9.25 235.00	279.0 127.0	229.0 104.0	354.0 161.0	249.0 113.0	350	14"
1.75 44.50	23.75 603.30	20	1.62 41.10	1-1/2	10.00 254.00	9.75 247.70	10.00 254.00	389.0 177.0	330.0 150.0	495.0 225.0	365.0 166.0	400	16"
1.94 49.30	25.75 654.10	20	1.75 44.50	1-5/8	10.75 273.10	10.50 266.70	10.75 273010	473.0 215.0	398.0 181.0	629.0 286.0	433.0 197.0	450	18"
2.13 54.10	28.50 723.90	24	1.75 44.50	1-5/8	11.25 285.80	11.00 279.40	11.50 292.10	590.0 268.0	508.0 231.0	807.0 367.0	570.0 259.0	500	20"
2.50 63.50	33.00 838.20	24	2.00 50.80	1-7/8	13.00 330.20	12.75 323.90	13.25 336.60	827.0 376.0	728.0 331.0	1247.0 567.0	807.0 367.0	600	24"

Class 900 Flanges

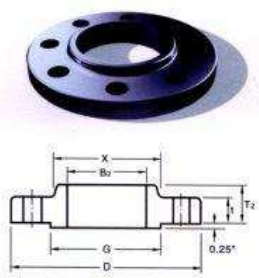

SLIP-ON

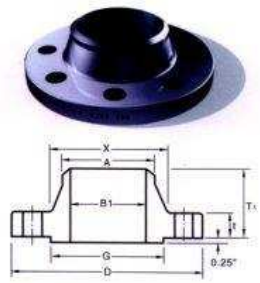

WELDING NECK

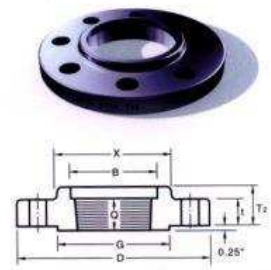

THREADED

LAP JOINT

BLIND

ANSI B16.5 FORGED FLANGES

Dimensions in inches

NPS	DIN	FLANGE OUTSIDE DIAMETER	FLANGE2 THICKNESS MIN	RAISED FACE DIA	Diam. At base of Hub	BORE				LENGTH THRU HUB			Diam. of Hub at Bevel	LA JOI FIL RAD
						WELDING NECK & SOCKET WELDING	SLIP-ONS SOCKET WELD SOCKET MIN	LAP JOINT MIN	Counter Bore Min Threaded Min	WELDING NECK	SLIP-ON, THREADED & SOCK WELD	LAP JOINT		
		D	t	G	X	B1	B2	B3	B	T1	T2	T3	A	r
1/2"	15	4.75 120.70	0.88 22.40	1.38 35.10	1.50 38.10	0.62 15.70	0.88 22.4	0.90 22.90	0.93 23.60	2.38 60.50	1.25 31.80	1.25 31.80	0.84 21.30	0. 3.
3/4"	20	5.12 130.00	1.00 25.40	1.69 42.90	1.75 44.50	0.82 20.80	1.09 27.70	1.11 28.20	1.14 29.00	2.75 69.90	1.38 35.10	1.38 35.10	1.05 26.70	0. 3.
1"	25	5.88 149.40	1.12 28.40	2.00 50.80	2.08 52.30	1.09 26.70	1.36 34.50	1.38 35.10	1.41 35.80	2.88 73.20	1.62 41.10	1.62 41.10	1.32 33.50	0. 3.
1-1/4"	32	6.25 158.80	1.12 28.40	2.50 63.50	2.50 63.50	1.38 35.10	1.70 43.20	1.72 43.70	1.75 44.50	2.88 73.20	1.62 41.10	1.62 41.10	1.66 42.20	0. 4.
1-1/2"	40	7.00 177.80	1.25 31.80	2.88 73.20	2.75 69.90	1.61 40.90	1.95 49.50	1.97 50.00	1.99 50.50	3.25 82.60	1.75 44.50	1.75 44.50	1.90 48.30	0. 6.
2"	50	8.50 215.90	1.50 38.10	3.62 91.90	4.12 104.60	2.07 52.60	2.44 62.00	2.46 62.50	2.50 63.50	4.00 101.60	2.25 57.20	2.25 57.20	2.38 60.50	0. 7.
2-1/2"	65	9.62 244.30	1.62 41.10	4.12 104.60	4.88 124.00	2.47 62.70	2.94 74.70	2.97 75.40	3.00 76.20	4.12 104.60	2.50 63.50	2.50 63.50	2.88 73.20	0. 7.
3"	80	9.50 241.30	1.50 38.10	5.00 127.00	5.00 127.00	3.07 78.00	3.57 90.70	3.60 91.40	3.63 92.20	4.00 101.60	2.12 53.80	2.12 53.80	3.50 88.90	0. 9.
4"	100	11.50 292.10	1.75 44.50	6.19 157.20	6.25 158.80	4.03 102.40	4.57 116.10	4.60 116.80	4.63 117.60	4.50 114.30	2.75 69.90	2.75 69.90	4.50 114.30	0. 11.
5"	125	13.75 349.30	2.00 50.80	7.31 185.70	7.50 190.50	5.05 128.30	5.66 143.80	5.69 144.50	5.69 144.50	5.00 127.00	3.12 79.20	3.12 79.20	5.56 141.20	0. 11.
6"	150	15.00 381.00	2.19 55.60	8.50 215.90	9.25 235.00	6.07 154.20	6.72 170.70	6.75 171.50	6.75 171.50	5.50 139.70	3.38 85.90	3.38 85.90	6.63 168.40	0. 12.
8"	200	18.50 469.90	2.50 63.50	10.62 269.70	11.75 298.50	7.98 202.70	8.72 221.50	8.75 222.30	8.75 222.30	6.38 162.10	4.00 101.60	4.50 114.30	8.63 219.20	0. 12.
10"	250	21.50 546.10	2.75 69.90	12.75 323.90	14.50 368.30	10.02 254.50	10.88 276.40	10.92 277.40	10.88 276.40	7.25 184.20	4.25 108.00	5.00 127.00	10.75 273.10	0. 12.
12"	300	24.00 609.60	3.12 79.20	15.00 381.00	16.50 419.10	11.94 303.30	12.88 327.20	12.92 328.20	12.94 328.70	7.88 200.20	4.62 117.30	5.62 142.70	12.75 323.90	0. 12.
14"	350	25.25 641.40	3.38 85.90	16.25 412.80	17.75 450.90	13.25 336.60	14.14 359.20	14.18 360.20	14.19 360.40	8.38 212.90	5.12 130.00	6.12 155.40	14.00 355.60	0. 12.
16"	400	27.75 704.90	3.50 88.90	18.50 469.90	20.00 508.00	15.25 387.40	16.16 410.50	16.19 411.20	16.19 411.20	8.50 215.90	5.25 133.40	6.50 165.10	16.00 406.40	0. 12.
18"	450	31.00 787.40	4.00 101.60	21.00 533.40	22.25 565.20	17.25 438.20	18.18 461.80	18.20 462.30	18.19 462.00	9.00 228.60	6.00 152.40	7.50 190.50	18.00 457.20	0. 12.
20"	500	33.75 857.30	4.25 108.00	23.00 584.20	24.50 622.30	19.25 489.00	20.20 513.10	20.25 514.40	20.19 512.80	9.75 247.70	6.25 158.80	8.25 209.60	20.00 508.00	0. 12.
24"	600	41.00 1041.40	5.50 139.70	27.25 692.20	29.50 749.30	23.25 590.60	24.25 616.00	24.25 616.00	24.19 614.40	11.50 292.10	8.00 203.2	10.50 266.70	24.00 609.60	0. 12.

> 1.Does not include,25" (6.4mm) raised face

DEPTH OF SOCKET	DRILLING			BOLTING				APPROXIMATE WEIGHT				DIN	NPS
					STUD BUT LENGTH								
Q	DIA.OF BOLT CIRCLE	NO.OF HOLES	DIA.OF HOLES	DIAM OF BOLTS	0.25" Raised Face	Male-Female Tongue-Groove	RING JOINT	WELDING NECK	SLIP-ON, THREADED & SOCK WELD	BLIND	LAP JOINT		
0.88 22.40	3.25 82.60	4	0.88 22.40	3/4	4.25 108.00	4.00 101.60	4.25 108.00	6.00 2.60	4.00 1.50	4.00 1.80	4.00 1.90	15	1/2"
1.00 25.40	3.50 88.90	4	0.88 22.40	3/4	4.50 114.30	4.25 108.00	4.50 114.30	6.00 2.90	5.00 2.40	6.00 2.70	5.00 2.30	20	3/4"
1.12 28.40	4.00 101.60	4	1.00 25.40	7/8	5.00 127.00	4.75 120.70	5.00 127.00	10.00 4.50	8.00 3.40	8.00 3.60	7.00 3.40	25	1"
1.19 30.20	4.38 111.30	4	1.00 25.40	7/8	5.00 127.00	4.75 120.70	5.00 127.00	13.00 5.90	9.00 4.10	10.00 4.50	9.00 4.10	32	1-1/4"
1.25 31.80	4.88 124.00	4	1.12 28.40	1	5.50 139.70	5.25 133.40	5.50 139.70	25.00 11.30	12.00 5.50	13.00 5.90	12.00 5.40	40	1-1/2"
1.50 38.10	6.50 165.10	8	1.00 25.40	7/8	5.75 146.10	5.50 139.70	5.75 146.10	31.00 14.10	22.00 10.00	25.00 11.30	21.00 9.50	50	2"
1.88 47.80	7.50 190.50	8	1.12 28.40	1	6.25 158.80	6.00 152.40	6.25 158.80	51.00 23.10	35.00 15.80	36.00 16.30	29.00 13.20	65	2-1/2"
1.62 41.10	7.50 190.50	8	1.00 25.40	7/8	5.75 146.10	5.50 139.70	5.75 146.10	57.00 26.00	26.00 11.80	54.00 24.50	25.00 11.30	80	3"
1.88 47.80	9.25 235.00	8	1.25 31.80	1-1/8	6.75 171.50	6.50 165.10	6.75 171.50	86.00 39.00	51.00 23.20	87.00 39.50	50.00 22.60	100	4"
2.12 53.80	11.00 279.40	8	1.38 35.10	1-1/4	7.50 190.50	7.25 184.20	7.50 190.50	110.00 49.90	59.00 37.70	103.00 46.60	81.00 36.70	125	5"
2.25 57.20	12.50 317.50	12	1.25 31.80	1-1/8	7.50 190.50	7.25 184.20	7.75 196.90	175.00 79.40	74.00 48.30	115.00 52.20	105.00 47.50	150	6"
2.50 63.50	15.50 393.70	12	1.50 38.10	1-3/8	8.75 222.30	8.50 215.90	8.75 222.30	260.00 118.00	118.00 75.00	205.00 93.00	189.00 86.00	200	8"
2.81 71.40	18.50 469.90	16	1.50 38.10	1-3/8	9.25 235.00	9.00 228.60	9.25 235.00	323.00 147.00	244.00 111.10	299.00 136.00	276.00 125.60	250	10"
3.00 76.20	21.00 533.40	20	1.50 38.10	1-3/8	10.00 254.00	9.75 247.70	10.00 254.00	398.00 181.00	321.00 146.00	431.00 196.00	367.00 167.00	300	12"
3.25 82.60	22.00 558.80	20	1.62 41.10	1-1/2	10.75 273.10	10.50 266.70	11.50 292.10	605.00 275.00	379.00 172.40	541.00 246.00	396.00 180.10	350	14"
3.38 85.90	24.25 616.00	20	1.75 44.50	1-5/8	11.25 285.80	11.00 279.40	11.75 298.50	766.00 348.00	424.00 193.00	620.00 282.00	464.00 211.10	400	16"
3.50 88.90	27.00 685.80	20	2.00 50.80	1-7/8	12.75 323.90	12.50 317.50	13.25 336.60	937.00 426.00	599.00 272.40	876.00 398.00	649.00 295.10	450	18"
3.62 91.90	29.50 749.30	20	2.12 53.80	2	13.75 349.30	13.50 342.90	14.25 362.00	1496.00 680.00	729.00 331.40	1096.00 49800	809.00 367.70	500	20"
4.00 101.60	35.50 901.70	20	2.62 66.50	2-1/2	17.25 438.20	17.00 431.80	18.00 457.20	1901.00 864.00	1390.00 632.00	2042.00 928.00	1540.00 700.00	600	24"

Class 1500 Flanges

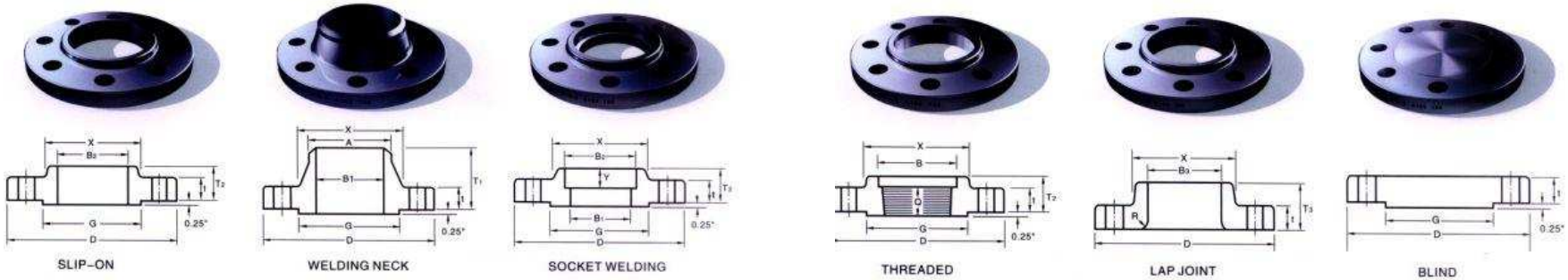

ANSI B16.5 FORGED FLANGES

Dimensions in inches

NPS		FLANGE OUTSIDE DIAMETER	FLANGE2 THICKNESS MIN	RAISED FACE DIA	Diam. At base of Hub	BORE				LENGTH THRU HUB			Diam. of Hub at Bevel	LAP JOINT FILLET RADIUS	Thread Length
						WELDING NECK & SOCKET WELDING	SLIP-ONN SOCKET WELD SOCKET MIN	LAP JOINT MIN	Counter Bore Min Threaded Min	WELDING NECK	SLIP-ON, THREADED & SOCK WELD	LAP JOINT			
	DIN	D	t	G	X	B1	B2	B3	B	T1	T2	T3	A	R	Q
1/2"	15	4.75 120.70	0.88 22.40	1.38 35.10	1.50 38.10	0.62 15.70	0.88 22.4	0.90 22.90	0.93	2.38 60.50	1.25 31.80	1.25 31.80	0.84 21.30	0.12 3.00	0.88
3/4"	20	5.12 130.00	1.00 25.40	1.69 42.90	1.75 44.50	0.82 20.80	1.09 27.70	1.11 28.20	1.14 29.00	2.75 69.90	1.38 35.10	1.38 35.10	1.05 26.70	0.12 3.00	1.00 25.40
1"	25	5.88 149.40	1.12 28.40	2.00 50.80	2.06 52.30	1.05 26.70	1.36 34.50	1.38 35.10	1.41 35.80	2.88 73.20	1.62 41.10	1.62 41.10	1.32 33.50	0.12 3.00	1.12 28.40
1-1/4"	32	6.25 158.80	1.12 28.40	2.50 63.50	2.50 63.50	1.38 35.10	1.70 43.20	1.72 43.70	1.75 44.50	2.88 73.20	1.62 41.10	1.62 41.10	1.66 42.20	0.19 4.80	1.19 30.20
1-1/2"	40	7.00 177.80	1.25 31.80	2.88 73.20	2.75 69.90	1.61 40.90	1.95 49.50	1.97 50.00	1.99 50.50	3.25 82.60	1.75 44.50	1.75 44.50	1.90 48.30	0.25 6.40	1.25 31.80
2"	50	8.50 215.90	1.50 38.10	3.62 91.90	4.12 104.60	2.07 52.60	2.44 62.00	2.46 62.50	2.50 63.50	4.00 101.60	2.25 57.20	2.25 57.20	2.38 60.50	0.31 7.90	1.50 38.10
2-1/2"	65	9.62 244.30	1.62 41.10	4.12 104.60	4.88 124.00	2.47 62.70	2.94 74.70	2.97 75.40	3.00 76.20	4.12 104.60	2.50 63.50	2.50 63.50	2.88 73.20	0.31 7.90	1.88 47.80
3"	80	10.50 266.70	1.88 47.80	5.00 127.00	5.25 133.40	3.07 78.00	3.57 90.70	3.60 91.40	3.63 92.20	4.62 117.30	2.88 73.20	2.88 73.20	3.50 88.90	0.38 9.70	2.00 50.80
4"	100	12.25 311.20	2.12 53.80	6.19 157.20	6.38 162.00	4.03 102.40	4.57 116.10	4.60 116.80	4.63 117.80	4.88 124.00	3.56 90.40	3.56 90.40	4.50 114.30	0.44 11.20	2.25 57.20
5"	125	14.75 374.70	2.88 73.20	7.31 185.70	7.75 196.90	5.05 128.30	5.66 143.80	5.69 144.50	5.69 144.50	6.12 155.40	4.12 104.60	4.12 104.60	5.56 141.20	0.44 11.20	2.50 63.50
6"	150	15.50 393.70	3.25 82.60	8.50 215.90	9.00 228.60	6.07 154.20	6.72 170.70	6.75 171.50	6.75 171.50	6.75 171.50	4.69 119.10	4.69 119.10	6.63 168.40	0.50 12.70	2.75 69.90
8"	200	19.00 482.60	3.62 91.90	10.62 269.70	11.50 292.10	7.98 202.70	8.72 221.50	8.75 222.30	8.75 222.30	8.38 212.90	5.62 142.70	5.62 142.70	8.63 219.20	0.50 12.70	3.00 76.20
10"	250	23.00 584.20	4.25 108.00	12.75 323.90	14.50 368.30	10.02 254.50	10.88 276.40	10.92 277.40	10.88 276.40	10.00 254.00	6.25 158.80	7.00 177.80	10.75 273.10	0.50 12.70	3.31 84.10
12"	300	26.50 673.10	4.88 124.00	15.00 381.00	17.75 450.90	11.94 303.30	12.88 327.20	12.92 328.20	12.94 328.70	11.12 282.40	7.12 180.80	8.62 218.90	12.75 323.90	0.50 12.70	3.62 91.90
14"	350	29.50 749.30	5.25 133.40	16.25 412.80	19.50 495.30	13.25 336.60	14.14 359.20	14.18 360.20	14.19 360.40	11.75 298.50	-	9.50 241.30	14.00 355.60	0.50 12.70	-
16"	400	32.50 825.50	5.75 146.10	18.50 469.90	21.75 552.50	15.25 387.40	16.16 410.50	16.19 411.20	16.19 411.20	12.25 311.20	-	10.25 260.40	16.00 406.40	0.50 12.70	-
18"	450	36.00 914.40	6.38 162.10	21.00 533.40	23.50 596.90	17.25 438.20	18.18 461.80	18.20 462.30	18.19 462.00	12.88 327.20	-	10.88 276.40	18.00 457.20	0.50 12.70	-
20"	500	38.75 984.30	7.00 177.80	23.00 584.20	25.25 641.40	19.25 489.00	20.20 513.10	20.25 514.40	20.19 512.80	14.00 355.60	-	11.50 292.10	20.00 508.00	0.50 12.70	-
24"	600	46.00 1168.40	8.00 203.20	27.25 692.20	30.00 762.00	23.25 590.60	24.25 616.00	24.25 616.00	24.19 614.40	16.00 406.40	-	13.00 330.20	24.00 609.60	0.50 12.70	-

> 1.Socket Welding flanges,size NPS31/2(DN90)and larger are not coveredby ANSIB16.5
> 2.Does not include,25" (6.4mm) raised face

PTH OF OCKET	DRILLING							APPROXIMATE WEIGHT				DIN	NPS
	DIA.OF BOLT CIRCLE	NO.OF HOLES	DIA.OF HOLES	DIAM OF BOLTS	MACHINE BOLT LENGTH	STUD BLIT LENGTH		WELDING NECK	SLIP-ON, THREADED & SOCK WELD	BLIND	LAP JIONT		
Y					R F	R F	RING JOINT						
.38 .70	3.25 82.60	4	0.88 22.40	3/4	4.25 108.00	4.00 101.60	4.25 108.00	6.00 2.80	5.00 2.30	5.00 2.30	5.00 2.30	15	1/2"
.44 .20	3.50 88.90	4	0.88 22.40	3/4	4.50 114.30	4.25 108.00	4.50 114.30	7.00 3.20	6.00 2.90	7.00 3.20	6.00 2.90	20	3/4"
.50 .70	4.00 101.60	4	1.00 25.40	7/8	5.00 127.00	4.75 120.70	5.00 127.00	11.00 4.90	8.00 3.60	10.00 4.50	7.00 3.20	25	1"
.56 .20	4.38 111.30	4	1.00 25.40	7/8	5.00 127.00	4.75 120.70	5.00 127.00	14.00 6.30	9.00 4.20	12.00 5.40	9.00 4.10	32	1-1/4"
.62 .70	4.88 124.00	4	1.12 28.40	1	5.50 139.70	5.25 133.40	5.50 139.70	26.00 11.80	13.00 5.70	15.00 6.80	12.00 5.30	40	1-1/2"
.69 .50	6.50 165.10	8	1.00 25.40	7/8	5.75 146.10	5.50 139.70	5.75 146.10	36.00 16.30	23.00 10.50	35.00 15.90	21.00 9.50	50	2"
.75 .10	7.50 190.50	8	1.12 28.40	1	6.25 158.80	6.00 152.40	6.25 158.80	48.00 21.80	35.00 15.80	48.00 21.80	29.00 13.20	65	2-1/2"
.81 .60	8.00 203.20	8	1.25 31.80	1-1/8	7.00 177.80	6.75 171.50	7.00 177.80	73.00 33.10	48.00 21.80	74.00 33.80	38.00 17.20	80	3"
.94 .90	9.50 241.30	8	1.38 35.10	1-1/4	7.75 196.90	7.50 190.50	7.75 196.90	130.00 59.00	68.00 31.00	130.00 59.00	64.00 29.00	100	4"
.94 .90	11.50 292.10	8	1.62 41.10	1-1/2	9.75 247.70	9.50 241.30	9.75 247.70	165.00 75.00	129.00 58.80	152.00 69.00	119.00 54.00	125	5"
.06 .90	12.50 317.50	12	1.50 38.10	1-3/8	10.25 260.40	10.00 254.00	10.50 266.70	275.00 125.00	163.00 74.00	168.00 76.20	136.00 62.00	150	6"
.25 .80	15.50 393.70	12	1.75 44.50	1-5/8	11.50 292.10	11.25 285.80	12.75 323.90	436.00 198.00	259.00 117.70	299.00 136.00	285.00 129.70	200	8"
.31 .30	19.00 482.60	12	2.00 50.80	1-7/8	13.25 336.60	13.00 330.20	13.50 342.90	629.00 286.00	434.00 197.50	508.00 231.00	484.00 220.20	250	10"
.56 .60	22.50 571.50	16	2.12 53.80	2	14.75 374.70	14.50 368.30	15.25 387.40	858.00 390.00	581.00 264.00	711.00 323.00	629.00 286.00	300	12"
.63 .40	25 635.00	16	2.38 60.50	2-1/4	16.00 406.40	15.75 400.10	16.75 425.50	1089.00 495.00	889.00 404.10	994.00 452.00	889.00 404.10	350	14"
.75 .50	27.75 704.90	16	2.62 66.50	2-1/2	17.50 444.60	17.25 438.20	18.50 469.90	1316.00 598.00	1149.00 522.10	1316.00 598.00	1149.00 522.10	400	16"
.94 .30	30.50 774.70	16	2.88 73.20	2-3/4	19.50 495.30	19.25 489.00	20.75 527.10	1619.00 736.00	1473.00 669.70	1793.00 815.00	1473.00 669.70	450	18"
.13 .10	32.75 831.90	16	3.12 79.20	3	21.25 539.80	21.00 533.40	22.25 565.20	2044.00 929.00	1773.00 805.90	2376.00 1080.00	1773.00 805.90	500	20"
.50 .50	39 990.60	16	3.62 91.90	3-1/2	24.25 616.00	24.00 609.60	25.50 647.70	3309.00 1504.00	2828.00 1285.60	3709.00 1686.00	2828.00 1285.60	600	24"

Class 2500 Flanges

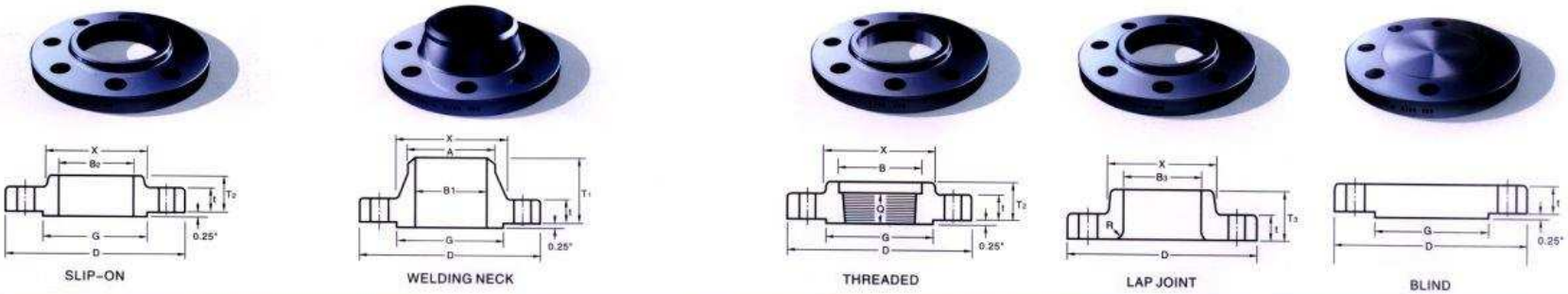

ANSI B16.5 FORGED FLANGES

Dimensions in inches

NPS	DIN	FLANGE OUTSIDE DIAMETER D	FLANGE THICKNESS MIN t	RAISED FACE DIA G	Diam. At base of Hub X	BORE: WELDING NECK & SOCKET WELDING B1	BORE: SLIP-ONS SOCKET WELD SOCKET MIN B2	BORE: LAP JOINT MIN B3	BORE: LAP JOINT MIN B	LENGTH THRU HUB: WELDING NECK T1	LENGTH THRU HUB: SLIP-ON, THREADED & SOCK WELD T2	LENGTH THRU HUB: LAP JOINT T3	Diam. of Hub at Bevel A	LAP JOINT FILLET RADIUS R	Thread Length Q
1/2"	15	5.25 133.40	1.19 30.20	1.38 35.10	1.69 42.90	0.62 15.70	0.88 22.40	0.90 22.90	0.93 23.60	2.88 73.20	1.56 39.60	1.56 39.60	0.84 21.30	0.12 3.00	1.12 28.40
3/4"	20	5.50 139.70	1.25 31.80	1.69 42.90	2.00 50.80	0.82 20.80	1.09 27.70	1.11 28.20	1.14 29.00	3.12 79.20	1.69 42.90	1.69 42.90	1.05 26.70	0.12 3.00	1.25 31.80
1"	25	6.25 158.80	1.38 35.10	2.00 50.80	2.25 57.20	1.05 26.70	1.36 34.50	1.38 35.10	1.41 35.80	3.50 88.90	1.88 47.80	1.88 47.80	1.32 33.50	0.12 3.00	1.38 35.10
1-1/4"	32	7.25 184.20	1.50 38.10	2.50 63.50	2.88 73.20	1.38 35.10	1.70 43.20	1.72 43.70	1.75 44.50	3.75 95.30	2.06 52.30	2.06 52.30	1.66 42.20	0.19 4.80	1.50 38.10
1-1/2"	40	8.00 203.20	1.75 44.50	2.88 73.20	3.12 79.20	1.61 40.90	1.95 49.50	1.97 50.00	1.99 50.50	4.38 111.30	2.38 60.50	2.38 60.50	1.90 48.30	0.25 6.40	1.75 44.50
2"	50	9.25 235.00	2.00 50.80	3.62 91.90	3.75 95.30	2.07 52.60	2.44 62.00	2.46 62.50	2.50 63.50	5.00 127.00	2.75 69.90	2.75 69.90	2.38 60.50	0.31 7.90	2.00 50.80
2-1/2"	65	10.50 266.70	2.25 57.20	4.12 104.60	4.50 114.30	2.47 62.70	2.94 74.70	2.97 75.40	3.00 76.20	5.62 142.70	3.12 79.20	3.12 79.20	2.88 73.20	0.31 7.90	2.25 57.20
3"	80	12.00 304.80	2.62 66.50	5.00 127.00	5.25 133.40	3.07 78.00	3.57 90.70	3.60 91.40	3.63 92.20	6.62 168.10	3.62 91.90	3.62 91.90	3.50 88.90	0.38 9.70	2.50 63.50
4"	100	14.00 355.60	3.00 76.20	6.19 157.20	6.50 165.10	4.03 102.40	4.57 116.10	4.60 116.80	4.63 117.60	7.50 190.50	4.25 108.00	4.25 108.00	4.50 114.30	0.44 11.20	2.75 69.90
5"	125	16.50 419.10	3.62 91.90	7.31 185.7	8.00 203.2	5.05 128.30	5.66 143.8	5.69 144.50	5.69 144.50	9.00 228.60	5.12 130.00	5.12 130.00	5.56 141.20	0.44 11.20	3.00 76.20
6"	150	19.00 482.60	4.25 108.00	8.50 215.90	9.25 235.00	6.07 154.20	6.72 170.70	6.75 171.50	6.75 171.50	10.75 273.10	6.00 152.40	6.00 152.40	6.63 168.40	0.50 12.70	3.25 82.60
8"	200	21.75 552.50	5.00 127.00	10.62 269.70	12.00 304.8	7.98 202.70	8.72 221.50	8.75 222.30	8.75 222.30	12.50 317.50	7.00 177.80	7.00 177.80	8.63 219.20	0.50 12.70	3.75 95.30
10"	250	26.50 673.10	6.50 165.10	12.75 323.90	14.75 374.7	10.02 254.50	10.88 276.40	10.92 277.40	10.88 276.40	16.50 419.10	9.00 228.60	9.00 228.60	10.75 273.10	0.50 12.70	4.25 108.00
12"	300	30.00 762.00	7.25 184.20	15.00 381.00	17.38 441.50	11.94 303.30	12.88 327.20	12.92 328.20	12.94 328.70	18.25 463.60	10.00 254.00	10.00 254.00	12.75 323.90	0.50 12.70	4.75 120.70

> 1.Does not include,25" (6.4mm) raised face

DEPTH OF SOCKET Y	DRILLING: DIA.OF BOLT CIRCLE	DRILLING: NO.OF HOLES	DRILLING: DIA.OF HOLES	DRILLING: DIAM OF BOLTS	DRILLING: STUD BOIT LENGTH: 0.25" Raised Face	DRILLING: STUD BOIT LENGTH: Male-Female Tongue-Groove	DRILLING: STUD BOIT LENGTH: RING JOINT	APPROXIMATE WEIGHT: WELDING NECK	APPROXIMATE WEIGHT: SLIP-ON, THREADED & SOCK WELD	APPROXIMATE WEIGHT: BLIND	APPROXIMATE WEIGHT: LAP JOINT	DIN	NPS
0.38 9.70	3.50 88.90	4	0.88 22.40	3/4	4.75 120.70	4.50 114.30	4.75 120.70	8.00 3.60	7.00 3.20	7.00 3.20	7.00 3.00	15	1/2"
0.44 11.20	3.75 95.30	4	0.88 22.40	3/4	5.00 127.00	4.75 120.70	5.00 127.00	12.00 5.40	9.00 4.20	8.00 3.80	8.00 3.60	20	3/4"
0.50 12.70	4.25 108.00	4	1.00 25.40	7/8	5.50 139.70	5.25 133.40	5.50 139.70	17.00 7.70	12.00 5.40	12.00 5.30	11.00 5.00	25	1"
0.56 14.20	5.12 130.00	4	1.12 28.40	1	6.00 152.40	5.75 146.10	6.00 152.40	25.00 11.30	18.00 8.20	17.00 7.70	16.00 7.30	32	1-1/4"
0.62 15.70	5.75 146.10	4	1.25 31.80	1-1/8	6.75 171.50	6.50 165.10	6.75 171.50	41.00 18.60	24.00 11.00	24.00 10.80	22.00 10.00	40	1-1/2"
0.69 17.50	6.75 171.50	8	1.12 28.40	1	7.00 177.80	6.75 171.50	7.00 177.80	52.00 23.60	38.00 17.30	41.00 18.60	37.00 16.80	50	2"
0.75 19.10	7.75 196.90	8	1.25 31.80	1-1/8	7.75 196.90	7.50 190.50	8.00 203.20	90.00 41.00	55.00 25.00	64.00 28.90	53.00 24.10	65	2-1/2"
0.81 20.60	9.00 228.60	8	1.38 35.10	1-1/4	8.75 222.30	8.50 215.90	9.00 228.60	130.00 59.00	83.00 37.90	88.00 39.80	80.00 36.30	80	3"
0.94 23.90	10.75 273.10	8	1.62 41.10	1-1/2	10.00 254.00	9.75 247.70	10.25 260.40	205.00 93.00	128.00 58.00	139.00 63.20	120 54.50	100	4"
0.94 23.90	12.75 323.90	8	1.88 47.80	1-3/4	11.75 298.50	11.50 292.10	12.25 311.20	282.00 128.00	210.00 95.30	213.00 97.00	204.00 92.50	125	5"
1.06 26.90	14.50 368.30	8	2.12 53.80	2	13.50 342.90	13.25 336.60	14.00 355.60	394.00 179.00	322.00 146.50	343.00 156.00	315.00 143.00	150	6"
1.25 31.80	17.25 438.20	12	2.12 53.80	2	15.00 381.00	14.75 374.70	15.50 393.70	574.00 261.00	484.00 220.00	528.00 240.00	469.00 213.40	200	8"
1.31 33.30	21.25 539.80	12	2.62 66.50	2-1/2	19.25 489.00	19.00 482.60	20.00 508.00	1067.00 485.00	923.00 419.60	1023 465.00	899.00 408.60	250	10"
1.56 39.60	24.38 619.30	12	2.88 73.20	2-3/4	21.25 539.80	21.00 533.40	22.00 558.80	1522.00 692.00	1298.00 590.20	1298 590.00	1260.00 573.00	300	12"

MILD STEEL FLANGES

Standard Specification
Nominal Dia:DC10-DG750
Standard Material:
Low-carbon Steel

COMPOSITIONS AND MECHANICAL PROPERTIES OF STEEL

COMPOSITIONS%					MECHANICAL PROPERTIES		
C	Si	Mn	P	S	TENSILE STRENGTH	YIELD POINT	ELONGATION
Max	Max	Min	Max		Min KG mm²		Min%
0.3	0.5		0.06		36-50	23	21

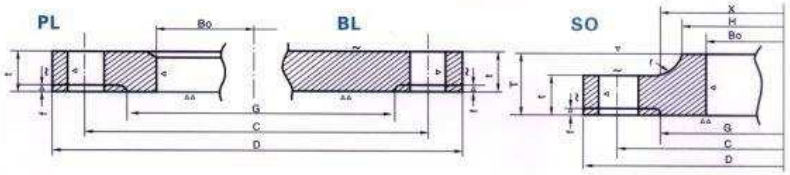

MLID STEEL FLAMGES JIS 5KG/CM²

NPS	DIN	Pipe Out Dia	Diam of Bore Bo	Sections Dimensions of Flange								Bolt Holes			Net Weoght(Kg)		
				Out Dia D	Thick t	T	Dia. Of Hub H	Dia. Of Hub X	Radius r	f	G	Centre Circle K	Nos.	Dia	PL	SO	BL
3/8"	10	17.3	17.8	75	9	-	-	-	-	1	42	55	4	12	0.27		0.30
1/2"	15	21.7	22.2	80	9	-	-	-	-	1	48	60	4	12	0.30		0.40
3/4"	20	27.2	27.7	85	10	-	-	-	-	1	52	65	4	12	0.37		0.50
1"	25	34.0	34.5	95	10	-	-	-	-	1	62	75	4	12	0.45		0.60
1-1/4"	32	42.7	43.2	115	12	-	-	-	-	2	72	90	4	15	0.78		0.90
1-1/2"	40	48.6	49.1	120	12	-	-	-	-	2	78	95	4	15	0.83		1.00
2"	50	60.5	61.1	130	14	-	-	-	-	2	88	105	4	15	1.07		1.40
2-1/2"	65	76.3	77.1	155	14	-	-	-	-	2	112	130	4	15	1.49		2.00
3"	80	89.1	90.0	180	14	-	-	-	-	2	125	145	4	19	1.99		2.70
3-1/2"	90	101.6	102.6	190	14	-	-	-	-	2	135	155	4	19	2.09		3.00
4"	100	114.3	115.4	200	16	-	-	-	-	2	145	165	8	19	2.39		3.70
5"	125	139.8	141.2	235	16	-	-	-	-	2	180	200	8	19	3.23		5.20
6"	150	165.2	166.6	265	18	-	-	-	-	2	210	230	8	19	4.41		7.50
7"	175	190.7	192.1	300	18	-	-	-	-	2	235	260	8	23	5.51		9.50
8"	200	216.3	218.0	320	20	-	-	-	-	2	255	280	8	23	6.33		12.20
9"	225	241.8	243.7	345	20	-	-	-	-	2	280	305	12	23	6.64		14.00
10"	250	267.4	269.5	385	22	-	-	-	-	2	320	345	12	23	9.45	10.10	19.30
12"	300	318.5	321.0	430	22	-	-	-	-	3	365	390	12	23	10.30	11.30	24.30
14"	350.	355.6	358.1	480	24	-	-	-	-	3	405	435	12	25	14.00	14.00	33.20
16"	400	406.4	409.0	540	24	-	-	-	-	3	465	495	16	25	16.90	18.30	41.90
18"	450	457.2	460.0	605	24	40	495	500	5	3	525	555	16	25	21.60	24.80	53.00
20"	500	508.0	511.0	655	24	40	546	552	5	3	575	605	20	25	23.10	26.90	61.90
22"	550	558.8	562.0	720	26	42	597	603	5	3	630	665	20	27	30.30	34.10	81.20
24"	600	609.6	613.0	770	26	44	648	654	5	3	680	715	20	27	32.70	37.50	93.20
26"	650	660.4	664.0	825	26	48	702	708	5	3	735	770	24	27	35.90	42.80	106.90
28"	700	711.2	715.0	875	26	48	751	758	5	3	785	820	24	27	38.20	45.40	120.60
30"	750	762.0	766.0	945	28	52	802	810	5	3	840	880	24	33	48.70	57.40	150.50

MILD STEEL FLANGESM JIS 10KG/CM² (Unit: mm)

NPS	DIN	Pipe Out Dia	Diam of Bore Bo	Sections Dimensions of Flange								Bolt Holes			Net Weoght(Kg)		
				Out Dia D	Thick t	T	Dia.of Hub H	Dia.of Hub X	Radius r	f	G	Centre Circle K	Nos.	Dia	PL	SO	BL
3/8"	10	17.3	17.8	90	12	-	-	-	-	1	48	65	4	15	0.52	-	0.54
1/2"	15	21.7	22.2	95	12	-	-	-	-	1	52	70	4	15	0.57	-	0.61
3/4"	20	27.2	27.7	100	14	-	-	-	-	1	58	75	4	15	0.73	-	0.79
1"	25	34.0	34.5	125	14	-	-	-	-	1	70	90	4	19	1.13	-	1.24
1-1/4"	32	42.7	43.2	135	16	-	-	-	-	2	80	100	4	19	1.48	-	1.66
1-1/2"	40	48.6	49.1	140	16	-	-	-	-	2	85	105	4	19	1.56	-	1.81
2	50	60.5	61.1	155	16	-	-	-	-	2	100	120	4	19	1.88	-	2.23
2-1/2"	65	76.3	77.1	175	18	-	-	-	-	2	120	140	4	19	2.60	-	3.24
3"	80	89.1	90.0	185	18	-	-	-	-	2	130	150	8	19	2.61	-	3.50
3-1/2"	90	101.6	102.6	195	18	-	-	-	-	2	140	160	8	19	2.76	-	4.00
4"	100	114.3	115.4	210	18	-	-	-	-	2	155	175	8	19	3.14	-	4.60
5"	125	139.8	141.2	250	20	-	-	-	-	2	185	210	8	23	4.77	-	7.30
6"	150	165.2	166.6	280	22	-	-	-	-	2	215	240	8	23	6.34	-	10.10
7"	175	190.7	192.1	305	22	-	-	-	-	2	240	265	12	23	6.82	7.28	11.80
8"	200	216.3	218.0	330	22	-	-	-	-	2	265	290	12	23	7.53	8.04	14.00
9"	225	241.8	243.7	350	22	-	-	-	-	2	285	310	12	23	7.74	8.44	15.80
10"	250	267.4	269.5	400	24	36	288	292	6	2	325	355	12	25	11.80	12.70	22.70
12"	300	318.5	321.0	445	26	-	-	-	-	3	370	400	16	25	13.60	-	30.30
12"	300	318.5	321.0	445	24	38	340	346	6	3	370	400	16	25	13.60	13.80	30.40
14"	350	355.6	358.1	490	26	42	380	386	6	3	415	445	16	25	16.40	18.20	37.10
16"	400	406.4	409.0	560	28	44	436	442	6	3	475	510	16	27	23.00	25.20	52.50
18"	450	457.2	460.0	620	30	48	496	502	6	3	530	565	20	27	29.50	33.00	68.80
20"	500	508.0	511.0	675	30	48	548	554	6	3	585	620	20	27	33.50	37.60	82.10
22"	550	558.8	562.0	745	32	52	604	610	6	3	640	680	20	33	43.10	49.70	105.80
24"	600	609.6	613.0	795	32	52	656	662	6	3	690	730	24	33	45.70	52.60	120.20
26"	650	660.4	664.0	845	34	56	706	712	6	3	740	780	24	33	52.10	60.60	145.00
28"	700	711.2	715.0	905	34	58	762	770	6	3	800	840	24	33	59.50	70.60	167.20
30"	750	762.0	766.0	970	36	62	816	824	6	3	855	900	24	33	73.20	85.80	204.20

MILD STEEL FLANGESM JIS 16KG/CM² (Unit: mm)

NPS	DIN	Pipe Out Dia	Diam of Bore Bo	Sections Dimensions of Flange								Bolt Holes			Net Weoght(Kg)		
				Out Dia D	Thick t	T	Dia.of Hub H	Dia.of Hub X	Radius r	f	G	Centre Circle K	Nos.	Dia	PL	SO	BL
3/8"	10	17.30	17.80	90	12	16	26	28	4	1	48	65	4	15	0.51	0.52	0.53
1/2"	15	21.70	22.20	95	12	16	30	32	4	1	52	70	4	15	0.56	0.58	0.60
3/4"	20	27.20	27.70	100	14	20	38	42	4	1	58	75	4	15	0.72	0.75	0.79
1"	25	34.00	34.50	125	14	20	46	50	4	1	70	90	4	19	1.13	1.16	1.23
1-1/4"	32	42.70	43.20	135	16	22	56	60	5	2	80	100	4	19	1.46	1.53	1.66
1-1/2"	40	48.60	49.10	140	16	24	62	66	5	2	85	105	4	19	1.56	1.64	1.81
2	50	60.50	61.10	155	16	24	76	80	5	2	100	120	8	19	1.70	1.80	2.10
2-1/2"	65	76.30	77.10	175	18	26	94	98	5	2	120	140	8	19	2.40	2.60	3.10
3"	80	89.10	90.00	200	20	28	108	112	6	2	135	160	8	23	3.50	3.70	4.50
3-1/2"	90	101.60	102.60	210	20	30	120	124	6	2	145	170	8	23	3.70	4.00	5.00
4"	100	114.30	115.40	225	22	34	134	138	6	2	160	185	8	23	4.50	4.90	6.30
5"	125	139.80	141.20	270	22	34	164	170	6	2	195	225	8	25	6.50	7.00	9.20
6"	150	165.20	166.60	305	24	38	196	202	6	2	230	260	12	25	8.70	9.60	12.80
8"	200	216.30	218.00	350	26	40	244	252	6	2	275	305	12	25	10.90	12.10	18.60
10"	250	267.40	269.50	430	28	44	304	312	6	2	345	380	12	27	18.00	20.00	30.60
12"	300	318.50	321.00	480	30	48	354	364	8	3	395	430	16	27	21.50	24.40	40.70
14"	350	355.60	358.10	540	34	52	398	408	8	3	440	480	16	33	30.80	35.00	57.80
16"	400	406.40	409.00	605	38	60	446	456	10	3	495	540	16	33	42.80	46.20	82.20
18"	450	457.20	460.00	675	40	64	504	514	10	3	560	605	20	33	55.10	61.90	107.60
20"	500	508.00	511.00	730	42	68	558	568	10	3	615	660	20	33	65.10	73.30	133.10
22"	550	558.80	562.00	795	44	70	612	622	10	3	670	720	20	39	77.90	88.10	164.10
24"	600	609.60	613.00	845	46	74	666	676	10	3	720	770	24	39	86.00	98.80	193.20
26"	650	660.40	664.00	895	48	77	704	726	10	5	770	820	24	39	96.30	101.00	227.50
28"	700	711.20	715.00	960	50	80	754	776	10	5	820	875	24	42	114.10	120.00	272.60
30"	750	762.00	766.00	1020	52	83	806	832	10	5	880	935	24	42	132.70	141.00	321.90

DIMENSIONAL TOLERANCES
FORGES STEEL FLANGES

Outside Diam eter(A)	When O.D.is 24" or less ± 1/16" "	Ortside Dia of Hub (F)	12" and smaller 12" 及以下 +3/32" "−1/16" "
	When O.D.is over24" ± 1/8" "		Over12" ± 1/8"
Inside Diam eter(D)	10" and smaller +1/32" −0" Slip−On. and Lap joint 12" and larger +1/16" −0"	Drilling	Bolt Circles ± 1/16"
			Bolt hole spacing ± 1/32"
			Eccentricity between21/2" and smaller1/32" Max bolt circle diameter21/2" 及以下 最大1/32" and machied facing 3" and larger1/16" Max diameter 3" 及以上 最大1/16"
Diam eter of Contact Face(c)	1/16" Raised ± 1/32"	Overall height (E)	On Flanges 18" and smaller1/8" "−1/32" " On Flanges larger than18" ± 3/16" "−1/16" "
	14" Raised,Face,Tongue and Groove or Male and Female	Thickness (B)	18" and smaller+1/8" −0"
			Over18" +3/16" −0"
Diam eter of Counterbore	Same as for inside,Diameter		Where allow ance has been left On face for finish:All sizes+1/8" "−1/16" "

Outside Diam eter(A)	When O.D.is 24" or less ± 1/16" "	Drilling	Bolt C.ircles ± 1/16"
	When O.D.is over24" ± 1/8"		Bolt hole spacing ± 1/32
Inside Diam eter(D)	10" and smaller ± 1/32"		Eccentricity between2 1/2" and smaller1/32" Max bolt circle diameter and machied facing 3" and larger1/16" Max diameter
	12" to 18" ± 1/16"		
	Over 18" ± 1/8" −1/16"	Width of Land	
Diam eter of Contact Face(c)	1/16" Raised Face ± 1/32"	Angleof Hub Bevel	All Sizes ± 21/2"
	1 4" Raised,Face,Tongue and Groove or Male and Female ± 1/64"		
Diam eter of Hub at Point of Welding(G)	5" and sm aller ± 3/32" −1/32"	Overall heights(E)	10" and smaller ± 1/16"
	6" and larger ± 5/32" −1/32"		12" and larger ± 1/8" −0 "
			18 "and smaller ± 3/16" −0"
Diam eter of Hub at Base(F)	When " F" is 24" and smaller ± 1/16" "	Thicknessa(B)	Where allow ance has been left On face for finish:All sizes + 1/8" "−1/16" "
	When " F" is over24" ± 1/8"		

BSIO TABLE 'E'

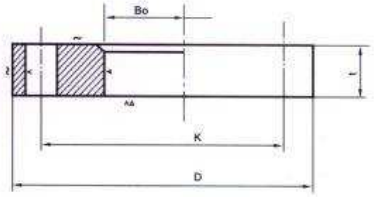

Standard Specification

Nominal dia : DG1/2"-DG16"

Nominal Pressure : PG=10KG/cm²

Standard Material : Low-carbon Stell

No.Pipe Size	Pipe Out Dia	DIAM OF Bore Bo	Out Dia D	Thick t	Nos.	Dia J	Centre Circle K	Approx. Weigh(Kg)
3/8"	17.30	17.80	95.30					
1/2"	21.70	22.20	101.60	9.50	4	14.50	66.70	0.75
3/4"	27.20	27.70	114.30	12.70	4	14.50	73.00	0.85
1"	34.00	34.50	120.70	12.70	4	14.50	82.60	0.88
1 1/4"	42.70	43.20	133.40	12.70	4	14.50	88.90	0.94
1 1/2"	48.60	49.10	152.00	12.70	4	14.50	98.40	1.15
2"	60.50	61.10	165.00	14.30	4	17.50	114.30	1.62
2 1/2"	76.30	77.70	184.20	14.30	4	17.50	127.00	1.83
3"	89.10	90.00	203.20	14.30	4	17.50	146.10	2.21
3 1/2"	101.60	102.60	215.90	15.90	8	17.50	165.10	2.71
4"	114.30	115.40	254.00	15.90	8	17.50	177.80	3.16
5"	139.80	141.20	279.40	17.50	8	17.50	209.60	4.60
6"	165.20	166.60	304.80	17.50	8	22.20	235.00	5.13
7"	190.70	192.10	336.60	19.10	8	22.20	260.40	6.11
8"	216.30	218.00	406.40	19.10	8	22.20	292.10	7.17
10"	267.40	269.50	457.20	22.20	12	22.20	355.60	11.65
12"	318.50	321.00	527.10	25.00	12	25.40	406.40	14.00
14"	355.60	358.10	577.90	25.40			469.90	
16"	406.40	409.00		25.40			520.70	

DIN 2527

Blind flansnhe: Nenndruck 6 bis 40

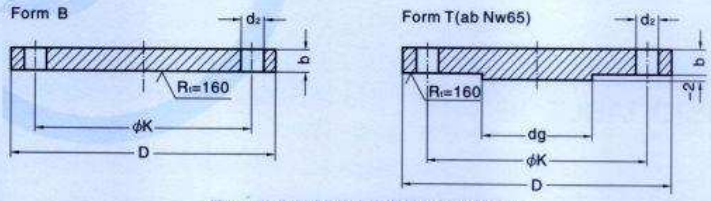

Flansch B 250 ND 6 DIN2527-Ust37-1

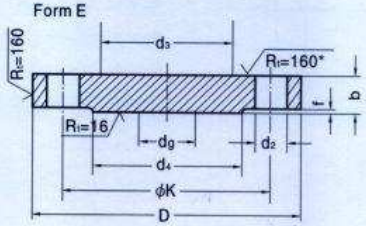

Flansch E 100 ND 64 DIN2527-C22

DIN 2632 2633 2634 2635 高颈对焊法兰

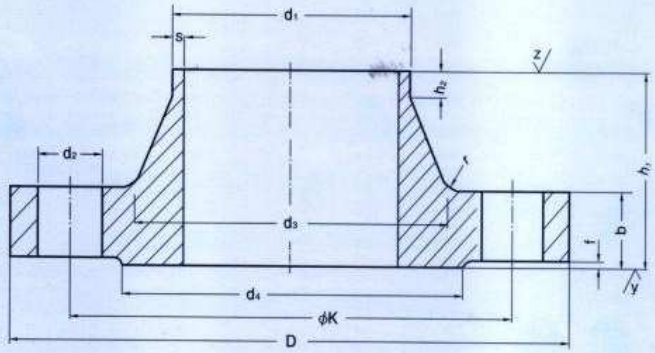

DIN 2632 2633 2634 2635

DIN 2632

Nenn-weite	d1		Flansch				Ansatz				Dichtleiste		Schrauben			Gweicht eines Flansches
	Reihe1	Reihe2	D	b	k	h1	d3	S	r	h2	d4	f	Anzahl	Gewinde	d2	
10	– 17.2	14 –	90	14	60	35	25 28	1.8	4	6	40	2	4	M12	14	0.58
15	– 21.3	20 –	95	14	65	35	30 32	2	4	6	45	2	4	M12	14	0.648
20	– 26.9	25 –	105	16	75	38	38 40	2.3	4	6	58	2	4	M12	14	0.952
25	– 33.7	30 –	115	16	85	38	42 45	2.6	4	6	68	2	4	M12	14	1.14
32	– 42.4	38 –	140	16	100	40	52 56	2.6	6	6	78	2	4	M16	18	1.69
40	– 48.3	44.5 –	150	16	110	42	60 64	2.6	6	7	88	3	4	M16	18	1.86
50	– 60.3	57 –	165	18	125	45	72 75	2.9	6	8	102	3	4	M16	18	2.53
65	76.1	–	185	18	145	45	90	2.9	6	10	122	3	4	M16	18	3.06
80	88.9	–	200	20	160	50	105	3.2	8	10	138	3	8	M16	18	3.70
100	– 114.3	108 –	220	20	180	52	125 131	3.6	8	12	158	3	8	M16	18	4.62
125	– 139.7	133 –	250	22	210	55	150 156	4	8	12	188	3	8	M16	18	6.3
150	– 168.3	159 –	285	22	240	55	175 184	4.5	10	12	212	3	8	M20	22	7.75
200	219.1	–	340	24	295	62	235	5.9	10	16	268	3	8	M20	22	11.3
250	– 273	267 –	395	26	350	68	285 292	6.3	12	18	320	3	12	M20	22	14.7
300	323.9	–	445	26	400	68	344	7.1	12	16	370	4	12	M20	22	17.4
350	355.6 –	– 368	505	26	460	68	385	7.1	12	16	430	4	16	M20	22	23.6 21.6
400	406.4 –	– 419	565	26	515	72	440	7.1	12	16	482	4	16	M24	26	28.6 26.2
500	508	–	670	28	620	75	542	7.1	12	16	585	4	20	M24	26	38.1
600	610	–	780	28	725	80	642	7.1	12	18	685	5	20	M27	30	44.6
700	711	–	895	30	840	80	745	8	12	18	800	5	24	M27	30	62.4
800	813	–	1015	32	950	90	850	8	12	18	905	5	24	M30	33	84.1
900	914	–	1115	34	1050	95	950	10	12	20	1005	5	28	M30	33	98.5
1000	1016	–	1230	34	1160	95	1052	10	16	20	1110	5	28	M33	36	115
1200	1220	–	1455	38	1380	115	1255	11	16	25	1330	5	32	M36	39	182
1400	1420	–	1675	42	1590	120	1460	12	16	25	1535	5	36	M39	42	248
1600	1620	–	1915	46	1820	130	1665	14	16	25	1780	5	40	M45	48	347
1800	1820	–	2115	50	2020	140	1868	15	16	30	1960	5	44	M45	48	430
2000	2020	–	2325	54	2230	150	2072	16	16	30	2170	5	48	M45	48	539
2200	2220	–	2550	58	2440	160	2275	18	18	35	2370	6	52	M52	56	658
2400	2420	–	2760	62	2650	170	2478	20	18	35	2570	6	56	M52	56	825
2600	2620	–	2960	66	2850	180	2680	22	18	40	2780	6	60	M52	56	979
2800	2820	–	3180	70	3070	190	2882	22	18	40	3000	6	64	M52	56	1156
3000	3020	–	3405	75	3290	200	3085	24	18	45	3210	6	68	M56	62	1402

DIN 2633

Nenn-weite	d1		Flansch				Ansatz				Dichtleiste		Schrauben			Gweicht eines Flansches
	Reihe1	Reihe2	D	b	k	h1	d3	S	r	h2	d4	f	Anzahl	Gewinde	d2	
10	- 17.20	14 -	90	14	60	35	25 28	1.8	4	6	40	2	4	M12	14	0.58
15	- 21.30	20 -	95	14	65	35	30 32	2.0	4	6	45	2	4	M12	14	0.648
20	- 26.90	25 -	105	16	75	38	38 40	2.3	4	6	58	2	4	M12	14	0.952
25	- 33.70	30 -	115	16	85	38	42 45	2.6	4	6	68	2	4	M12	14	1.14
32	- 42.40	38 -	140	16	100	40	52 56	2.6	6	6	78	2	4	M16	18	1.69
40	- 48.30	44.5 -	150	16	110	42	60 64	2.6	6	7	88	3	4	M16	18	1.86
50	- 60.30	57 -	165	18	125	45	72 75	2.9	6	8	102	3	4	M16	18	2.53
65	76.10	-	185	18	145	45	90	2.9	6	10	122	3	4	M16	18	3.06
80	88.90	-	200	20	160	50	105	3.2	8	10	138	3	8	M16	18	3.70
100	- 114.30	108 -	220	20	180	52	125 131	3.6	8	12	158	3	8	M16	18	4.62
125	- 139.70	133 -	250	22	210	55	150 156	4.0	8	12	188	3	8	M16	18	6.30
150	- 168.30	159 -	285	22	240	55	175 184	4.5	10	12	212	3	8	M20	22	7.75
(175)	193.70	-	315	24	270	60	210	5.4	10	12	242	3	8	M20	22	9.65
200	219.10	-	340	24	295	62	235	5.9	10	16	263	3	12	M20	22	11.00
250	- 273.00	267 -	405	26	355	70	285 292	6.3	12	16	320	3	12	M24	26	15.60
300	323.90	-	460	28	410	78	344	7.1	12	16	373	4	12	M24	26	22.00
350	355.60 -	- 368	520	30	470	82	390	8.0	12	16	438	4	16	M24	26	31.20 28.80
400	406.40 -	- 419	580	32	525	85	445	8.0	12	16	490	4	16	M27	30	39.30 36.60
500	508		715	34	650	90	548	8.0	12	16	610	4	20	M30	33	61.00
600	610		840	36	770	95	652	8.8	12	18	725	5	20	M33	36	75.40
700	711		910	36	840	100	755	8.8	12	18	795	5	24	M33	36	77
800	813		1025	38	950	105	855	10.0	12	20	900	5	24	M36	39	101
900	914		1125	40	1050	110	955	10.0	12	20	1000	5	28	M36	39	122
1000	1016	-	1255	42	1170	120	1058	10.0	16	22	1115	5	28	M39	42	162
1200	1220		1435	48	1390	130	1262	12.5	16	30	1330	5	32	M45	48	243
1400	1420		1685	52	1590	145	1465	14.2	16	30	1530	5	36	M45	48	323
1600	1620		1930	58	1820	160	1668	16.0	16	35	1750	5	40	M52	56	479
1800	1820		2130	62	2020	170	1870	17.5	16	35	1950	5	44	M52	56	599
2000	2020		2345	66	2230	180	2072	20.0	16	40	2150	5	48	M56	62	719

DIN 2634

Nenn-weite	d1		Flansch				Ansatz				Dichtleiste		Schrauben			Gweicht eines Flansches
	Reihe1	Reihe2	D	b	k	h1	d3	S	r	h2	d4	f	Anzahl	Gewinde	d2	
10	- 17.20	14 -	90	16	60	35	25 28	1.8	4	6	40	2	4	M12	14	0.661
15	- 21.30	20 -	95	16	65	38	30 32	2.0	4	6	45	2	4	M12	14	0.748
20	- 26.90	25 -	105	18	75	40	38 40	2.3	4	6	58	2	4	M12	14	1.06
25	- 33.70	30 -	115	18	85	40	42 46	2.6	4	6	68	2	4	M12	14	1.29
32	- 42.40	38 -	140	18	100	42	52 56	2.6	6	6	78	2	4	M16	18	1.88
40	- 48.30	44.5 -	150	18	110	45	60 64	2.6	6	7	88	3	4	M16	18	2.33
50	- 60.30	57 -	165	20	125	48	72 75	2.9	6	8	102	3	4	M16	18	2.82
65	76.10	-	185	22	145	52	90	2.9	6	10	122	3	8	M16	18	3.74
80	88.90	-	200	24	160	58	105	3.2	8	12	138	3	8	M16	18	4.75
100	- 114.30	108 -	235	24	190	65	128 134	3.6	8	12	162	3	8	M20	22	6.52
125	- 139.70	133 -	270	26	220	68	155 162	4.0	8	12	188	3	8	M24	26	9.07
150	- 168.30	159 -	300	28	250	75	182 192	4.5	10	12	218	3	8	M24	26	11.80
(175)	193.70	-	330	28	280	75	218	5.6	10	15	248	3	12	M24	26	13.40
200	219.10	-	360	30	310	80	244	6.3	10	16	278	3	12	M24	26	17.00
250	- 273.00	267 -	425	32	370	88	292 298	7.1	12	18	335	3	12	M27	30	24.40
300	323.90	-	485	34	430	92	352	8.0	12	18	395	4	16	M27	30	31.20
350	355.60 -	- 368	555	38	490	100	398	8.0	12	20	450	4	16	M30	33	47.20 44.20
400	406.40 -	- 419	620	40	550	110	452	8.8	12	20	505	4	16	M33	36	61.70 57.90
500	508		730	44	660	125	558	10.0	12	20	615	4	20	M33	36	89.60
600	610		845	46	770	125	660	11.0	12	20	720	5	20	M36	39	104
700	711		960	46	875	125	760	12.5	12	20	820	5	24	M39	42	136
800	813		1085	50	990	135	865	14.2	12	22	930	5	24	M45	48	186
900	914		1185	54	1090	145	968	16.0	12	24	1030	5	28	M45	48	236
1000	1016		1320	58	1210	155	1070	17.5	16	24	1140	5	28	M52	56	307

DIN 2635

Nenn-weite	d1		Flansch				Ansatz				Dichtleiste		Schrauben			Gweicht eines Flansches
	Reihe1	Reihe2	D	b	k	h1	d3	S	r	h2	d4	f	Anzahl	Gewinde	d2	
10	– 17.20	14 –	90	16	60	35	25 28	1.8	4	6	40	2	4	M12	14	0.661
15	– 21.30	20 –	95	16	65	38	30 32	2.0	4	6	45	2	4	M12	14	0.746
20	– 26.90	25 –	105	18	75	40	38 40	2.3	4	6	58	2	4	M12	14	1.06
25	– 33.70	30 –	115	18	85	40	42 46	2.6	4	6	68	2	4	M12	14	1.29
32	– 42.40	38 –	140	18	100	42	52 56	2.6	6	6	78	2	4	M16	18	1.88
40	– 48.30	44.5 –	150	18	110	45	60 64	2.6	6	7	88	3	4	M16	18	2.33
50	– 60.30	57 –	165	20	125	48	72 75	2.9	6	8	102	3	4	M16	18	2.82
65	76.10	–	185	22	145	52	90	2.9	6	10	122	3	8	M16	18	3.74
80	88.90	–	200	24	160	58	105	3.2	8	12	138	3	8	M16	18	4.75
100	– 114.30	108 –	235	24	190	65	128 134	3.6	8	12	162	3	8	M20	22	6.52
125	– 139.70	133 –	270	26	220	68	155 162	4.0	8	12	188	3	8	M24	26	9.07
150	– 168.30	159 –	300	28	250	75	182 192	4.5	10	12	218	3	8	M24	26	11.80
(175)	193.70	–	350	32	295	82	218	5.6	10	15	260	3	12	M27	30	18.20
200	219.10	–	375	34	320	88	244	6.3	10	16	285	3	12	M27	30	21.50
250	– 273.00	267 –	450	38	385	105	298 306	7.1	12	18	345	3	12	M30	33	34.90
300	323.90	–	515	42	450	115	362	8.0	12	18	410	4	16	M30	33	49.70
350	355.60 –	– 368	580	46	510	125	408	8.8	12	20	465	4	16	M33	36	68.10
400	406.40 –	– 419	660	50	585	135	462	11.0	12	20	535	4	16	M36	39	96.50
500	508.00		755	52	670	140	562	14.2	12	20	615	4	20	M39	42	117.00

DIN 2527-6

Nenn-weite	Flansch			dg	Schrauben			Gweicht eines Flansches	
	D	b	k		Anzahl	Gewinde	d2	Form B	Form T
10	75	12	50		4	M10	11	0.38	
15	80	12	55					0.44	
20	90	14	65					0.65	
25	100	14	75					0.82	
32	120	14	90			M12	14	1.17	
40	130	14	100					1.39	
50	140	14	110					1.62	
65	160	14	130	55				2.44	2.48
80	190	16	150	70		M16	18	3.43	3.49
100	210	16	170	90				4.76	4.86
125	240	18	200	115	8			6.11	6.28
150	265	18	225	140				7.51	7.75
(175)	295	20	255	165				10.4	10.7
200	320	20	280	190				12.3	12.7
250	375	22	335	235				18.3	19
300	440	22	395	285	12	M20	22	25.3	26.3
350	490	22	445	330				31.6	32.9
400	540	22	495	380	16			38.4	40.2
500	645	24	600	475	20			60.4	63.2

DIN 2527-10

Nenn-weite	Flansch			dg	Schrauben			Gweicht eines Flansches	
	D	b	k		Anzahl	Gewinde	d2	Form B	Form T
10	90	14	60		4	M12	14	0.63	
15	95	14	65					0.72	
20	105	16	75					1.01	
25	115	16	85					1.23	
32	140	16	100			M16	18	1.8	
40	150	16	110					2.09	
50	165	18	125					2.88	
65	185	18	145	55				3.66	3.70
80	200	20	160	70	8			4.77	4.83
100	220	20	180	90				5.65	5.75
125	250	22	210	115				8.42	8.59
150	285	22	240	140				10.4	10.60
(175)	315	24	270	165				14	14.30
200	340	24	295	190				16.5	16.90
250	395	26	350	235	12	M20	22	24	24.70
300	445	26	400	285				30.9	31.90
350	505	26	460	330				40.6	41.90
400	565	26	515	380	16	M24	26	49.4	51.20
500	670	28	620	475	20			75	77.80

DIN 2527-16

Nennweite	Flansch			dg	Schrauben			Gewicht	
	D	b	k		Anzahl	Gewinde	d2	Form B	Form T
10	90	14	60		4	M12	14	0.63	
15	95	14	65					0.72	
20	105	16	75					1.01	
25	115	16	85					1.23	
32	140	16	100			M16	18	1.80	
40	150	16	110					2.09	
50	165	18	125					2.88	
65	185	18	145	55				3.66	3.70
80	200	20	160	70	8			4.77	4.83
100	220	20	180	90				5.65	5.75
125	250	22	210	115				8.42	8.59
150	285	22	240	140		M20	22	10.40	10.60
(175)	315	24	270	165				14.00	14.30
200	340	24	295	190				16.10	16.50
250	405	26	355	235	12	M24	26	24.90	25.60
300	460	28	410	285				35.10	36.10
350	520	30	470	330	16			47.80	49.10
400	580	32	525	380		M27	30	63.50	65.30
500	715	36	650	475	20	M30	33	102.00	105.00

DIN 2527-25

Nennweite	Flansch			dg	Schrauben			Gewicht	
	D	b	k		Anzahl	Gewinde	d2	Form B	Form T
10	90	16	60		4	M12	14	0.72	
15	95	16	65					0.81	
20	105	18	75					1.24	
25	115	18	85					1.38	
32	140	18	100			M16	18	2.03	
40	150	18	110					2.35	
50	165	20	125					3.20	
65	185	22	145	55	8			4.29	4.33
80	200	24	160	70				5.88	5.97
100	235	24	190	90		M20	22	7.54	7.64
125	270	26	220	115		M24	26	10.80	11.00
150	300	28	250	140				14.50	14.70
(175)	330	28	280	165	12			17.30	17.60
200	360	30	310	190				22.30	22.70
250	425	32	370	237		M27	30	33.50	34.20
300	485	34	430	285	16			46.30	47.30
350	555	38	490	332		M30	33	68.00	69.30
400	620	40	550	380		M33	36	89.70	91.50
500	730	45	660	475	20			138.00	141.00

DIN 2527-40

Nennweite	Flansch			dg	Schrauben			Gewicht	
	D	b	k		Anzahl	Gewinde	d2	Form B	Form T
10	90	16	60					0.72	
15	95	16	65			M12	14	0.81	
20	105	18	75					1.24	
25	115	18	85		4			1.38	
32	140	18	100					2.03	
40	150	18	110					2.35	
50	165	20	125			M16	18	3.20	
65	185	22	145	55				4.29	4.33
80	200	24	160	70				5.88	5.97
100	235	24	190	90	8	M20	22	7.54	7.64
125	270	26	220	115		M24	26	10.80	11.00
150	300	28	250	140				14.50	14.70
(175)	350	32	295	165		M27	30	22.10	22.40
200	375	34	320	190	12			27.20	27.60
250	450	38	385	235		M30	33	43.80	44.50
300	515	42	450	285				63.30	64.30
350	580	46	510	330	16	M33	36	89.50	90.80
400	660	50	585	380		M36	39	127.00	129.00
500	755	56	670	475	20	M39	42	172.00	175.00

DIN 2527-64

Nennweite	Flansch							Schrauben			Gweicht eines
	D	b	k	d3	d4	dg	f	Anzahl	Gewinde	d2	
10	100	20	70	32	40		2	4	M12	14	1.00
15	105	20	75	34	45		2	4	M12	14	1.22
25	140	24	100	52	68		2	4	M16	18	2.65
32	155	24	110	62	78		2	4	M20	22	3.24
40	170	26	125	70	88		3	4	M20	22	4.09
50	180	26	135	82	102		3	4	M20	22	4.51
65	205	26	160	98	122	45	3	8	M20	22	5.71
80	215	28	170	112	138	60	3	8	M20	22	6.92
100	250	30	200	138	162	80	3	8	M24	26	10.10
125	295	34	240	168	188	105	3	8	M27	30	16.00
150	345	36	280	202	218	130	3	8	M30	33	23.50
(175)	375	40	310	228	260	155	3	12	M30	33	30.80
200	415	42	345	256	285	180	3	12	M33	36	39.70
250	470	46	400	316	345	220	3	12	M33	36	57.40
300	530	52	460	372	410	270	4	16	M33	36	81.00
350	600	56	525	420	465	310	4	16	M36	39	114.00
400	670	60	585	475	535	360	4	16	M39	42	153.00

DIN 2527-100

Nennweite	Flansch							Schrauben			Gweicht eines
	D	b	k	d3	d4	dg	f	Anzahl	Gewinde	d2	
10	100	20	70	32	40		2	4	M12	14	1.00
15	105	20	75	34	45		2	4	M12	14	1.22
25	140	24	100	52	68		2	4	M16	18	2.65
32	155	24	110	62	78		2	4	M20	22	3.24
40	170	26	125	70	88		3	4	M20	22	4.09
50	195	28	145	90	102		3	4	M24	26	5.84
65	220	30	170	108	122	45	3	8	M24	26	8.03
80	230	32	180	120	138	60	3	8	M24	26	9.43
100	265	36	210	150	162	80	3	8	M27	30	14.30
125	315	40	250	180	188	105	3	8	M30	33	22.60
150	355	44	290	210	218	130	3	12	M30	33	31.80
(175)	385	48	320	245	260	155	3	12	M30	33	41.30
200	430	52	360	278	285	180	3	12	M33	36	56.10
250	505	60	430	340	345	210	3	12	M36	39	89.60
300	585	68	500	400	410	260	4	16	M39	42	119.00
350	655	74	560	460	465	300	4	16	M45	48	175.00

(Specification:1/2"~60" specification applicant)

ASTM :

AMSE, B16.5, B16.36, B16.47, B16.48, API 605, API 6A 6B, MSS Sp44, AWWAC207

BS:

BS4504, PN10, PN16, PN25, PN40, BS10, TABLE 'E'

JIS :

JIS/KS, 5K, 7K, 10K, 16K

DIN:

2527, 2573, 2576, 2627, 2528, 2529, 2630, 2631, 2632, 2633, 2634, 2635, 2636, 2637

Italian Standard:

22